Contents

1. Nomenclature 2
2. Product Schedule.....2
3. External Appearance.....3
4. Features 3
5. Specifications 4
6. Dimension 8
7. Wiring Diagrams.....9
8. Capacity Tables 11
9. Explored View.....31
10. Installation 37

※ Manufacture reserves the right to discontinue, or change at any time, specifications or designs without notices and without incurring obligations.

1. Nomenclature

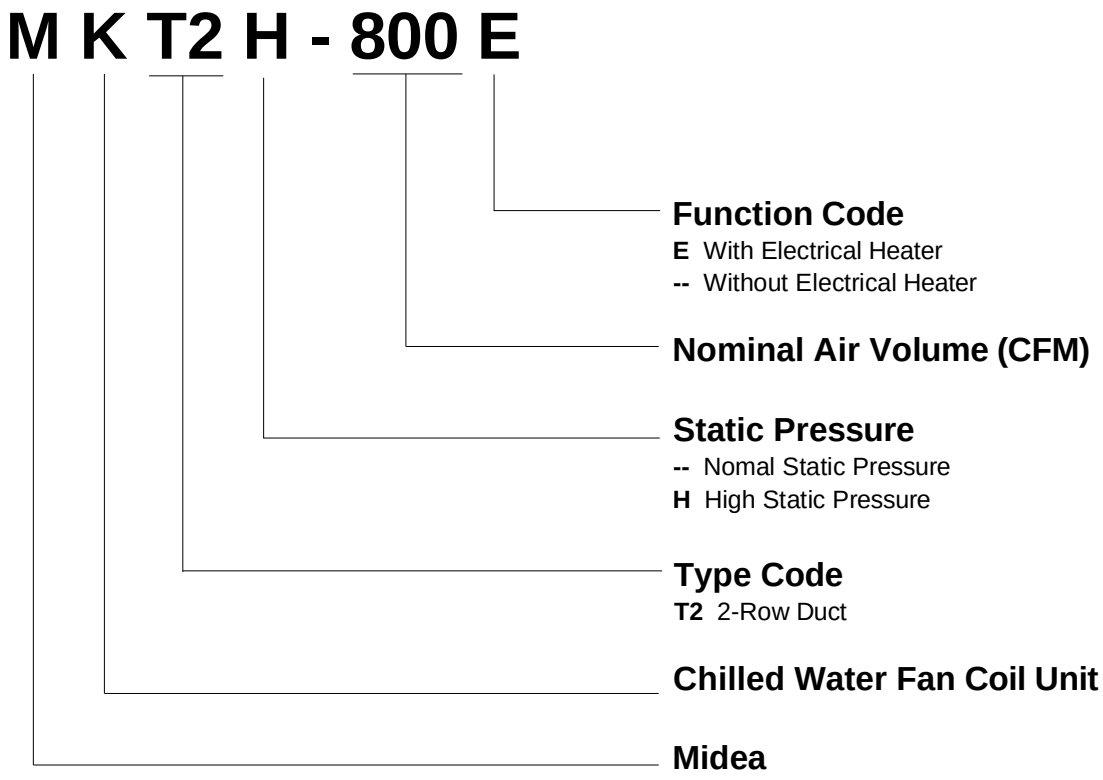

2. Product Schedule

No	Type	Auxiliary Electrical Heater	Model	Power source
1	2-Row Duct Type	Without	MKT2(H)-200	220-240V~,1Ph, 50Hz
2			MKT2(H)-300	
3			MKT2(H)-400	
4			MKT2(H)-500	
5			MKT2(H)-600	
6			MKT2(H)-800	
7			MKT2(H)-1000	
8			MKT2(H)-1200	
9			MKT2(H)-1400	
10		With	MKT2(H)-200E	
11			MKT2(H)-300E	
12			MKT2(H)-400E	
13			MKT2(H)-500E	
14			MKT2(H)-600E	
15			MKT2(H)-800E	
16			MKT2(H)-1000E	
17			MKT2(H)-1200E	
18			MKT2(H)-1400E	

3. External Appearance

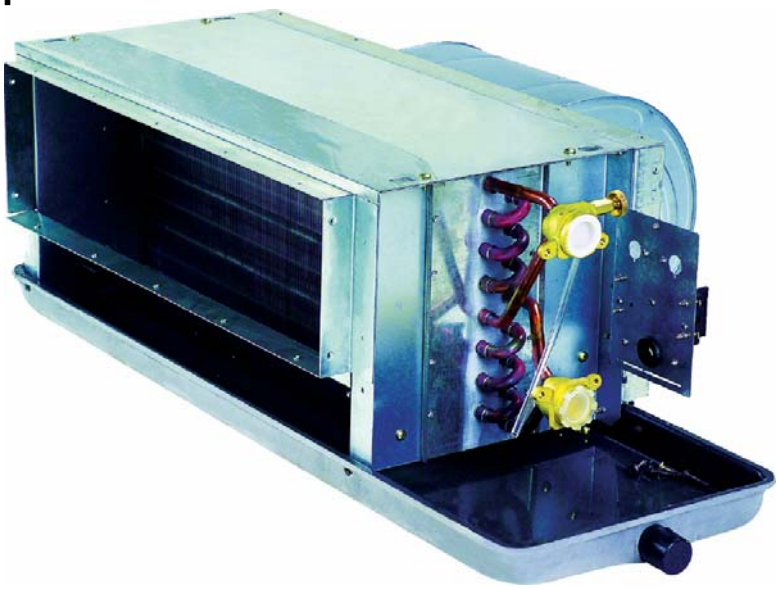

4. Features

BASIC UNIT

All fan coils are manufactured with high quality galvanized steel to resist corrosion.
Wiring connections of all models are easily accessible. Mounting holes and / or slots are pre-drilled to save installation time and field labor expense.

MOTORS & BLOWER WHEELS

Standard motors are 3 speeds, 220V / 1 ph / 50Hz. Blower wheels are centrifugal.

COIL

Coils have 7 mm O.D. seamless copper tubing mechanically bounded to high efficiency aluminum fins. Each coil is factory tested at 2.4 MPa, and easily accessible for service.
Left and right hand coil connections are available. We will furnish left hand connection, if not specified in the order.

DRAIN PANS

Drain pans is made of coated metal. Drain pan exterior is insulated with a closed cell fire retardant rubber insulation to prevent sweating.
All drain pans are sloped towards the drain connection to facilitate condensate removal.

- Drain pans connections provided from both sides is optional.

OPTIONS

Available options include return box, thermostats, hot water coil, motorized 2-way/3-way valve and etc. Contact Midea Commercial Air-conditioning Equipment Co., Ltd. for other available options.

5. Specifications

Model (2 Rows)			MKT2-200 MKT2H-200	MKT2-300 MKT2H-300	MKT2-400 MKT2H-400	MKT2-500 MKT2H-500	MKT2-600 MKT2H-600
Air Volume	High speed	m^3/h	340	510	680	850	1020
		CFM	200	300	400	500	600
	Mid speed	m^3/h	285	420	580	700	840
		CFM	168	247	341	412	494
	Low speed	m^3/h	210	320	420	520	620
		CFM	124	188	247	306	365
Capacity	Cooling (W)		2000	2700	3600	4500	5400
	Heating (W)		3200	4300	5400	6800	8100
	Water flow (l/min)		5.7	7.7	10.3	12.9	15.5
	Hydraulic resistance (kPa)		9.8	11	21	12.7	17.5
Fan	Type		Forward curved double inlet centrifugal				
	Quantity		1	2	2	2	2
	Noise dB(A)	Standard	36	38	40	42	43
		High ESP	39	41	43	44	45
Motor	Type		3 speed, low noise capacitance motor				
	Quantity		1	1	1	1	1
	Power source		220V~240V, 50Hz / 60Hz				
	Power input (W)	Standard	35	41	60	75	96
		High ESP	41	57	70	82	108
Coil	Type		copper tube bounded with grilled aluminum fin				
	Working pressure		1.6MPa				
Connection pipe	Water inlet		RC3/4” internal thread				
	Water outlet		RC3/4” internal thread				
	Drainage		ZG3/4” external thread				
Net dimension (W×H×D)		mm	770X240X490	827X240X490	927X240X490	1140X240X490	1140X240X490
Packing dimension (W×H×D)		mm	786X265X515	841X265X515	941X265X515	1155X265X515	1155X265X515
Net weight (kg)	Without air-return box		12	13	15	19	19
Gross weight (kg)	Without air-return box		14	17	19	22	22

Model (2 Rows)			MKT2-800 MKT2H-800	MKT2-1000 MKT2H-1000	MKT2-1200 MKT2H-1200	MKT2-1400 MKT2H-1400
Air Volume	High speed	m^3/h	1360	1700	2040	2380
		CFM	800	1000	1200	1400
	Mid speed	m^3/h	1150	1400	1650	2000
		CFM	677	824	971	1177
	Low speed	m^3/h	840	1000	1250	1480
		CFM	494	589	736	871
Capacity	Cooling (W)		7200	9000	11000	13000
	Heating (W)		11000	13500	16500	19500
	Water flow (l/min)		20.6	25.8	31.5	37.3
	Hydraulic resistance (kPa)		13.6	20	35	40
Fan	Type		Forward curved double inlet centrifugal			
	Quantity		4	4	4	4
	Noise dB(A)	Standard	43	46	47	48
		High ESP	46	48	50	52
Motor	Type		3 speed, low noise capacitance motor			
	Quantity		2	2	2	2
	Power source		220V~240V, 50Hz / 60Hz			
	Power input (W)	Standard	124	150	186	225
		High ESP	124	174	204	234
Coil	Type		copper tube bounded with grilled aluminum fin			
	Working pressure		1.6MPa			
Connection pipe	Water inlet		RC3/4” internal thread			
	Water outlet		RC3/4” internal thread			
	Drainage		ZG3/4” external thread			
Net dimension (W×H×D)		mm	1440X240X490	1546X240X490	1835X240X490	1835X240X490
Packing dimension (W×H×D)		mm	1455X265X515	1560X265X515	1850X265X515	1850X265X515
Net weight (kg)	Without air-return box		27	29	33	34
Gross weight (kg)	Without air-return box		29	34	37	38

Remark: 1. All performance data above is based upon 12Pa external static pressure of standard products and 30 Pa of high ESP product.

2. Cooling capacity test condition: air inlet Temp. : 27DB℃/19WB℃, water inlet Temp. 7℃, water Temp. difference 5℃.

3. Heating capacity test condition:

   Air inlet Temp. 21DB℃, water inlet Temp. 50 DB℃

   The volume of air and water is same as cooling.

4. Noise level is tested in full-anechoic room.

Model (2 Rows)			MKT2-200E MKT2H-200E	MKT2-300E MKT2H-300E	MKT2-400E MKT2H-400E	MKT2-500E MKT2H-500E	MKT2-600E MKT2H-600E
Air Volume	High speed	m^3/h	340	510	680	850	1020
		CFM	200	300	400	500	600
	Mid speed	m^3/h	285	420	580	700	840
		CFM	168	247	341	412	494
	Low speed	m^3/h	210	320	420	520	620
		CFM	124	188	247	306	365
Capacity	Cooling (W)		2000	2700	3600	4500	5400
	Heating (W)		3200	4300	5400	6800	8100
	Water flow (l/min)		5.7	7.7	10.3	12.9	15.5
	Hydraulic resistance (kPa)		9.8	11	21	12.7	17.5
Electrical Heater		W	500	650	1000	1000	1500
Fan	Type		Forward curved double inlet centrifugal				
	Quantity		1	2	2	2	2
	Noise dB(A)	Standard	36	38	40	42	44
		High ESP	39	41	43	44	45
Motor	Type		3 speed, low noise capacitance motor				
	Quantity		1	1	1	1	1
	Power source		220V~240V, 50Hz / 60Hz				
	Power input (W)	Standard	35	41	60	75	96
		High ESP	41	57	70	82	108
Coil	Type		copper tube bounded with grilled aluminum fin				
	Working pressure		1.6MPa				
Connection pipe	Water inlet		RC3/4” internal thread				
	Water outlet		RC3/4” internal thread				
	Drainage		ZG3/4” external thread				
Net dimension (W×H×D)		mm	770X242X534	827X242X534	927X242X534	1140X242X534	1140X242X534
Packing dimension (W×H×D)		mm	806X265X558	871X265X558	971X265X558	1185X265X558	1185X265X558
Net weight (kg)	Without air-return box		18	19	25	28	28
Gross weight (kg)	Without air-return box		22	23	28	31	31

Model (2 Rows)			**MKT2-800E MKT2H-800E**	**MKT2-1000E MKT2H-1000E**	**MKT2-1200E MKT2H-1200E**	**MKT2-1400E MKT2H-1400E**
Air Volume	High speed	m^3/h	1360	1700	2040	2380
		CFM	800	1000	1200	1400
	Mid speed	m^3/h	1150	1400	1650	2000
		CFM	677	824	971	1177
	Low speed	m^3/h	840	1000	1250	1480
		CFM	494	589	736	871
Capacity	Cooling (W)		7200	9000	11000	13000
	Heating (W)		11000	13500	16500	19500
	Water flow (l/min)		20.6	25.8	31.5	37.3
	Hydraulic resistance (kPa)		14.4	20.5	35	40
Electrical Heater		kW	2000	2000	3000	3000
Fan	Type		Forward curved double inlet centrifugal			
	Quantity		4	4	4	4
	Noise dB(A)	Standard	45	46	47	48
		High ESP	46	48	50	52
Motor	Type		3 speed, low noise capacitance motor			
	Quantity		2	2	2	2
	Power source		220V~240V, 50Hz / 60Hz			
	Power input (W)	Standard	124	150	186	225
		High ESP	124	174	204	234
Coil	Type		copper tube bounded with grilled aluminum fin			
	Working pressure		1.6MPa			
Connection pipe	Water inlet		RC3/4” internal thread			
	Water outlet		RC3/4” internal thread			
	Drainage		ZG3/4” external thread			
Net dimension (W×H×D)		mm	1440X242X534	1546X242X534	1835X242X534	1835X242X534
Packing dimension (W×H×D)		mm	1485X265X558	1590X265X558	1880X265X558	1880X265X558
Net weight (kg)	Without air-return box		34	37	44	44
Gross weight (kg)	Without air-return box		37	41	48	48

Remark: 1. All performance data above is based upon 12Pa external static pressure of standard products and 30 Pa of high ESP product.

2. Cooling capacity test condition: air inlet Temp. : 27DB℃/19WB℃, water inlet Temp. 7℃, water Temp. difference 5℃.

3. Heating capacity test condition:

Air inlet Temp. 21DB℃, water inlet Temp. 50 DB℃

The volume of air and water is same as cooling.

4. Noise level is tested in full-anechoic room.

5. The auxiliary electrical heater is only available for MKT2(H)-XXXE series.

6. Dimension

6.1 All models without auxiliary electrical heater:

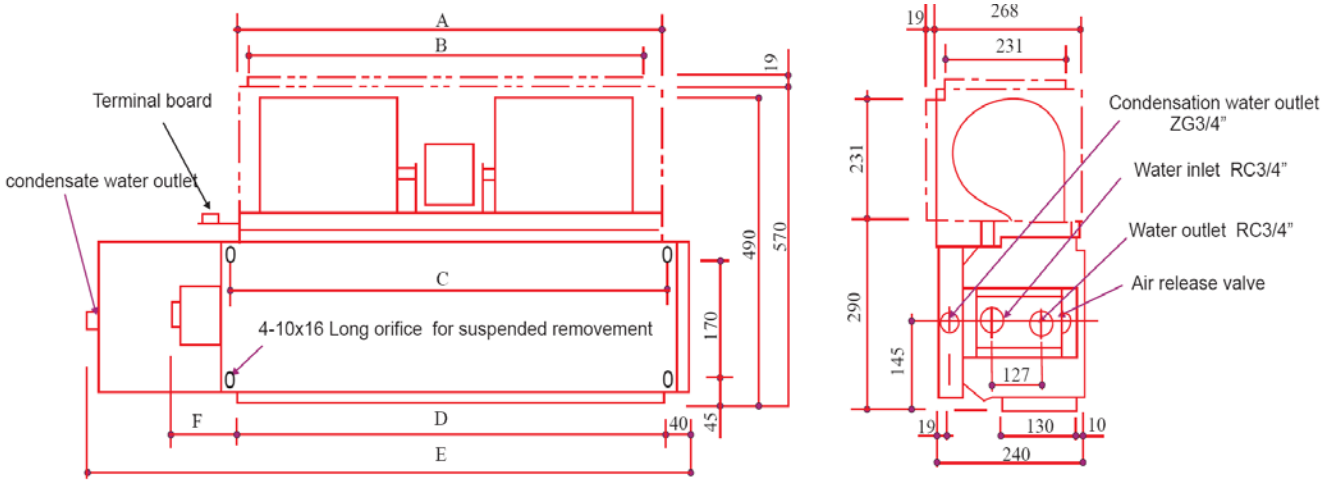

Model / Size	MKT2-200 MKT2H-200	MKT2-300 MKT2H-300	MKT2-400 MKT2H-400	MKT2-500 MKT2H-500 MKT2-600 MKT2H-600	MKT2-800 MKT2H-800	MKT2-1000 MKT2H-1000	MKT2-1200 MKT2H-1200	MKT2-1400 MKT2H-1400
A	543	643	743	963	1263	1368	1658	1658
B	485	585	685	905	1205	1310	1600	1600
C	513	612	713	933	1233	1338	1628	1628
D	485	585	685	905	1205	1310	1600	1600
E	770	827	927	1140	1440	1546	1835	1835
F	106	106	106	106	106	106	106	106

6.2 All models with auxiliary electrical heater:

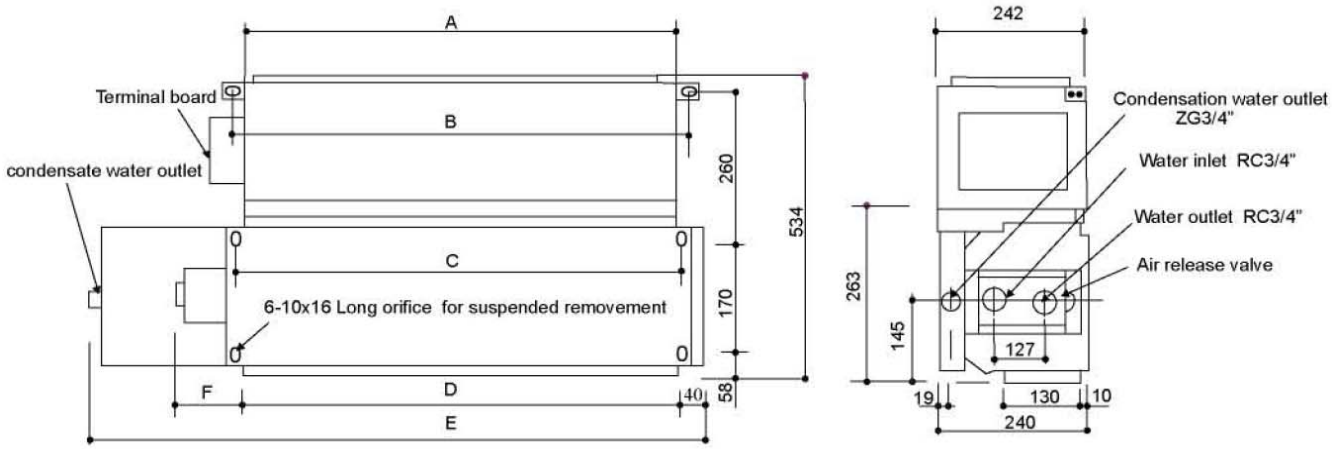

Model / Size	MKT2-200E MKT2H-200E	MKT2-300E MKT2H-300E	MKT2-400E MKT2H-400E	MKT2-500E MKT2H-500E MKT2-600E MKT2H-600E	MKT2-800E MKT2H-800E	MKT2-1000E MKT2H-1000E	MKT2-1200E MKT2H-1200E	MKT2-1400E MKT2H-1400E
A	543	643	743	963	1263	1368	1658	1658
B	595	675	795	995	1295	1400	1710	1710
C	513	612	713	933	1233	1338	1628	1628
D	485	585	685	905	1205	1310	1600	1600
E	770	827	927	1140	1440	1546	1835	1835
F	106	106	106	106	106	106	106	106

7. Wiring Diagrams

MKT2-200 MKT2-300 MKT2-400 MKT2-500 MKT2-600
MKT2H-200 MKT2H-300 MKT2H-400 MKT2H-500 MKT2H-600

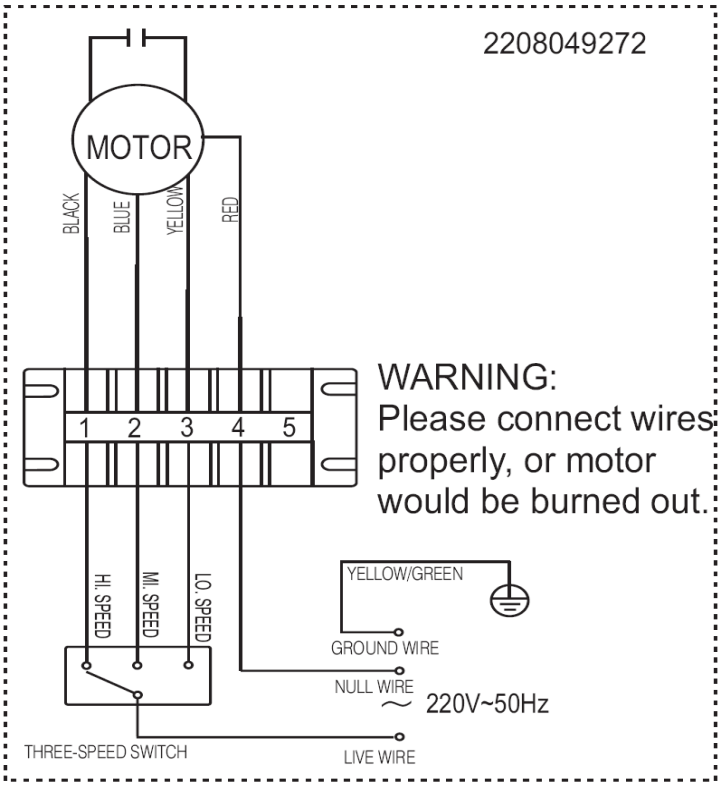

MKT2-800 MKT2-1000 MKT2-1200 MKT2-1400
MKT2H-800 MKT2H-1000 MKT2H-1200 MKT2H-1400

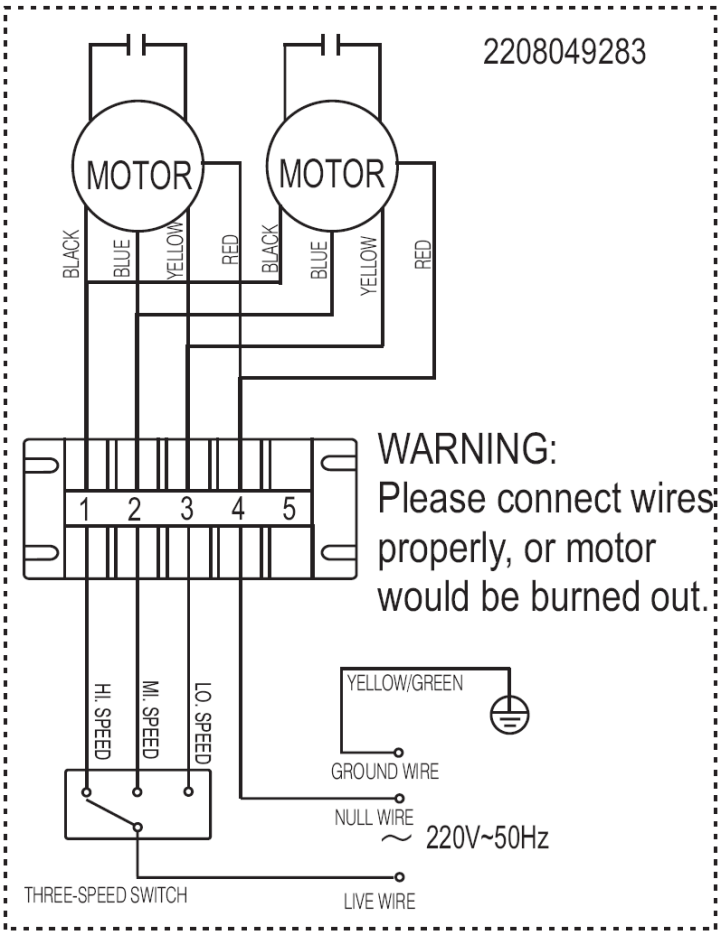

All models with auxiliary electrical heater:

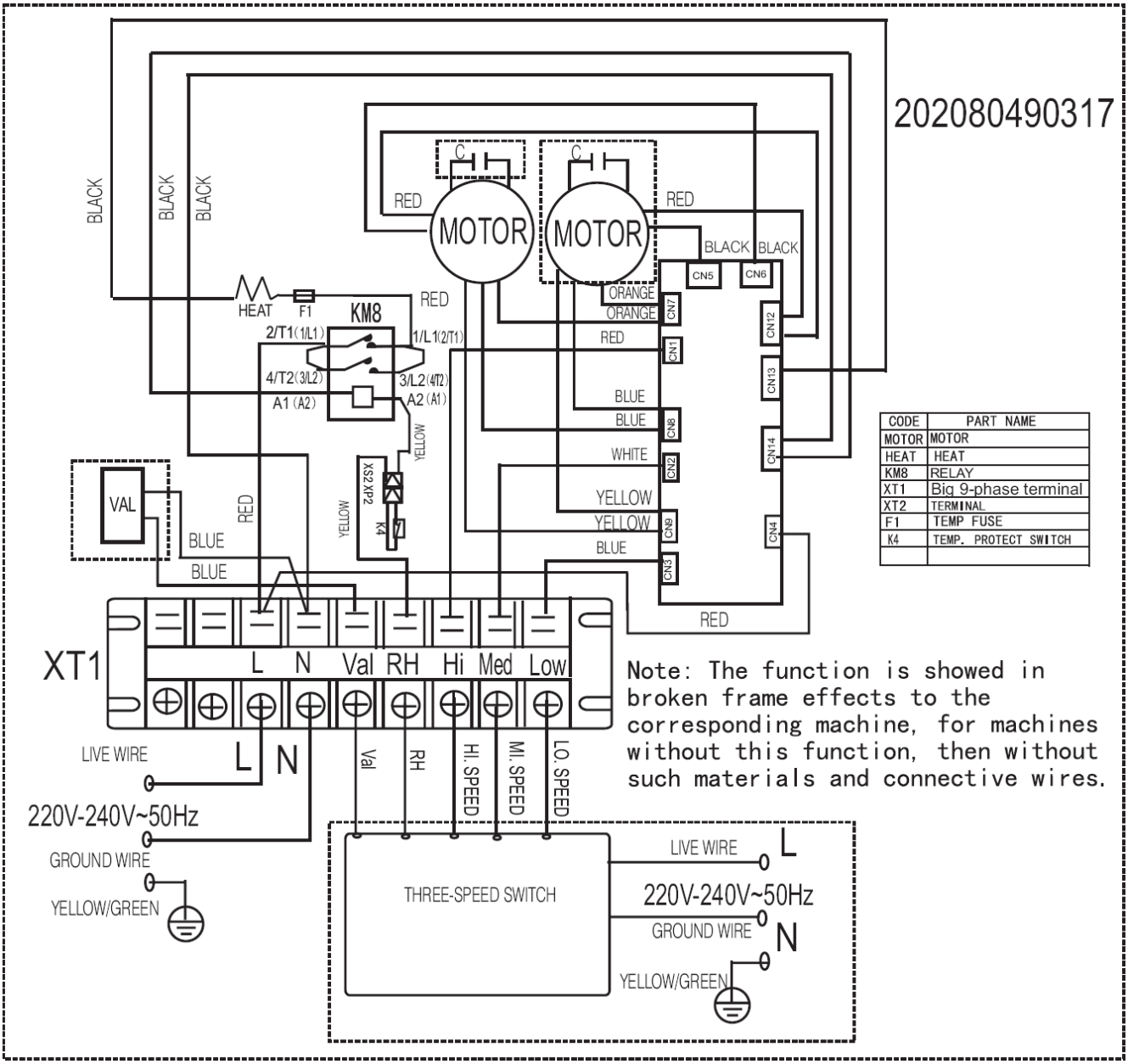

8. Capacity Tables

Cooling Capacity:

For MKT2 models:

Model	Speed	Air On FCU		Water		Delta Water Temp.	ESP	Speed of Fan	Air Flow	Air Off FCU		Capacity		Water Flow	Water Pressure Drop	Weight	Input	
		DB	WB	EWT	LWT					DB	WB	Total	Sens.				PWR	Fan Motors
		℃	℃	℃	℃	℃	Pa	rpm	m^3/h	℃	℃	kW	kW	m^3/h	kPa	kg	W	nos.
MKT2-200(E)	High	26.7	19.4	7	12	5	0	760	400	14.4	13.7	1.83	1.40	0.32	10.70	12	31	1
							12	760	380	14.6	13.9	1.77	1.35	0.31	10.10	12	31	1
				5.5	14.5	9	0	760	400	17.3	16.2	1.00	0.77	0.16	4.60	12	31	1
							12	760	380	17.6	16.6	0.97	0.74	0.15	4.10	12	31	1
		27	19	7	12	5	0	760	400	14.6	13.6	2.00	1.45	0.30	10.30	12	31	1
							12	760	380	14.8	13.9	1.90	1.40	0.29	9.80	12	31	1
				5.5	14.5	9	0	760	400	16.9	16.3	0.95	0.79	0.15	4.20	12	31	1
							12	760	380	17.1	16.2	0.92	0.77	0.15	3.80	12	31	1
		29	21	7	12	5	0	760	400	14.7	13.8	2.29	1.60	0.40	11.20	12	31	1
							12	760	380	15	14	2.22	1.54	0.38	10.40	12	31	1
				5.5	14.5	9	0	760	400	18.2	17.1	1.26	0.88	0.20	5.20	12	31	1
							12	760	380	18.4	17.4	1.22	0.85	0.19	4.50	12	31	1
	Mid	26.7	19.4	7	12	5	0	660	340	14.2	13.2	1.67	1.27	0.29	10.49	12	27	1
							12	660	320	14.4	13.5	1.62	1.23	0.28	9.90	12	27	1
				5.5	14.5	9	0	660	340	16.8	15.9	0.92	0.70	0.14	4.51	12	27	1
							12	660	320	17	16.2	0.89	0.67	0.14	4.02	12	27	1
		27	19	7	12	5	0	660	340	14	13.1	1.59	1.31	0.28	10.10	12	27	1
							12	660	320	14.3	13.6	1.54	1.27	0.27	9.61	12	27	1
				5.5	14.5	9	0	660	340	16.7	15.8	0.87	0.72	0.14	4.12	12	27	1
							12	660	320	16.9	16	0.85	0.70	0.13	3.73	12	27	1
		29	21	7	12	5	0	660	340	14.2	13.3	2.09	1.45	0.36	10.98	12	27	1
							12	660	320	14.5	13.7	2.03	1.40	0.35	10.20	12	27	1
				5.5	14.5	9	0	660	340	17.5	16.2	1.15	0.79	0.18	5.10	12	27	1
							12	660	320	18	17.1	1.11	0.77	0.18	4.41	12	27	1
	Low	26.7	19.4	7	12	5	0	550	280	13.6	12.7	1.46	1.09	0.25	10.18	12	23	1
							12	550	266	13.9	13	1.41	1.05	0.24	9.61	12	23	1
				5.5	14.5	9	0	550	280	16.7	15.5	0.80	0.60	0.13	4.38	12	23	1
							12	550	266	17	16	0.77	0.58	0.12	3.90	12	23	1
		27	19	7	12	5	0	550	280	13.8	12.9	1.38	1.13	0.24	9.80	12	23	1
							12	550	266	14.1	13.4	1.34	1.09	0.23	9.33	12	23	1
				5.5	14.5	9	0	550	280	16.5	15.4	0.76	0.62	0.12	4.00	12	23	1
							12	550	266	16.7	15.7	0.73	0.60	0.12	3.62	12	23	1
		29	21	7	12	5	0	550	280	13.5	12.6	1.81	1.24	0.31	10.66	12	23	1
							12	550	266	13.8	13	1.75	1.20	0.30	9.90	12	23	1
				5.5	14.5	9	0	550	280	17.3	16.3	1.00	0.68	0.16	4.95	12	23	1
							12	550	266	17.6	16.7	0.96	0.66	0.15	4.28	12	23	1

MKT2-300(E)	High	26.7	19.4	7	12	5	0	760	532	14.4	13.7	2.74	2.14	0.47	12.01	13	48	1
							12	760	510	14.6	13.9	2.66	2.07	0.46	11.33	13	48	1
				5.5	14.5	9	0	760	532	17.3	16.2	1.51	1.18	0.24	5.16	13	48	1
							12	760	510	17.6	16.6	1.46	1.14	0.23	4.60	13	48	1
		27	19	7	12	5	0	760	532	14.6	13.6	2.79	2.19	0.48	11.56	13	48	1
							12	760	510	14.8	13.9	2.70	2.12	0.46	11.00	13	48	1
				5.5	14.5	9	0	760	532	16.9	16.3	1.53	1.20	0.24	4.71	13	48	1
							12	760	510	17.1	16.2	1.49	1.17	0.23	4.26	13	48	1
		29	21	7	12	5	0	760	532	14.7	13.8	3.46	2.45	0.59	12.57	13	48	1
							12	760	510	15	14	3.35	2.37	0.58	11.67	13	48	1
				5.5	14.5	9	0	760	532	18.2	17.1	1.90	1.35	0.30	5.83	13	48	1
							12	760	510	18.4	17.4	1.84	1.30	0.29	5.05	13	48	1
	Mid	26.7	19.4	7	12	5	0	600	438	14.2	13.2	2.40	2.04	0.41	11.77	13	38.5	1
							12	600	420	14.4	13.5	2.33	1.97	0.39	11.11	13	38.5	1
				5.5	14.5	9	0	600	438	16.8	15.9	1.32	1.12	0.21	5.06	13	38.5	1
							12	600	420	17	16.2	1.28	1.08	0.20	4.51	13	38.5	1
		27	19	7	12	5	0	600	438	14	13.1	2.31	2.10	0.38	11.33	13	38.5	1
							12	600	420	14.3	13.6	2.24	2.03	0.37	10.78	13	38.5	1
				5.5	14.5	9	0	600	438	16.7	15.8	1.27	1.16	0.19	4.62	13	38.5	1
							12	600	420	16.9	16	1.23	1.12	0.19	4.18	13	38.5	1
		29	21	7	12	5	0	600	438	14.2	13.3	2.99	2.10	0.51	12.32	13	38.5	1
							12	600	420	14.5	13.7	2.90	2.02	0.50	11.44	13	38.5	1
				5.5	14.5	9	0	600	438	17.5	16.2	1.64	1.16	0.26	5.72	13	38.5	1
							12	600	420	18	17.1	1.60	1.11	0.25	4.95	13	38.5	1
	Low	26.7	19.4	7	12	5	0	480	372	13.6	12.7	2.28	1.94	0.38	11.43	13	32	1
							12	480	357	13.9	13	2.22	1.87	0.37	10.79	13	32	1
				5.5	14.5	9	0	480	372	16.7	15.5	1.25	1.07	0.19	4.91	13	32	1
							12	480	357	17	16	1.22	1.03	0.19	4.38	13	32	1
		27	19	7	12	5	0	480	372	13.8	12.9	2.19	2.00	0.36	11.00	13	32	1
							12	480	357	14.1	13.4	2.13	1.98	0.35	10.47	13	32	1
				5.5	14.5	9	0	480	372	16.5	15.4	1.20	1.10	0.18	4.49	13	32	1
							12	480	357	16.7	15.7	1.17	1.09	0.18	4.06	13	32	1
		29	21	7	12	5	0	480	372	13.5	12.6	2.80	2.25	0.46	11.96	13	32	1
							12	480	357	13.8	13	2.73	2.13	0.45	11.11	13	32	1
				5.5	14.5	9	0	480	372	17.3	16.3	1.54	1.24	0.23	5.55	13	32	1
							12	480	357	17.6	16.7	1.50	1.17	0.23	4.81	13	32	1
MKT2-400(E)	High	26.7	19.4	7	12	5	0	780	709	14.4	13.7	3.65	2.79	0.63	21.83	15	63	1
							12	780	679	14.6	13.9	3.54	2.69	0.61	20.60	15	63	1
				5.5	14.5	9	0	780	709	17.3	16.2	2.01	1.53	0.32	9.38	15	63	1
							12	780	679	17.6	16.6	1.95	1.48	0.31	8.36	15	63	1
		27	19	7	12	5	0	780	709	14.6	13.6	3.71	2.85	0.64	21.01	15	63	1
							12	780	679	14.8	13.9	3.60	2.75	0.62	19.99	15	63	1
				5.5	14.5	9	0	780	709	16.9	16.3	2.04	1.57	0.32	8.57	15	63	1

							12	780	679	17.1	16.2	1.98	1.51	0.31	7.75	15	63	1
		29	21	7	12	5	0	780	709	14.7	13.8	4.57	3.19	0.79	22.85	15	63	1
							12	780	679	15	14	4.43	3.08	0.76	21.22	15	63	1
				5.5	14.5	9	0	780	709	18.2	17.1	2.51	1.75	0.40	10.61	15	63	1
							12	780	679	18.4	17.4	2.44	1.69	0.38	9.18	15	63	1
	Mid	26.7	19.4	7	12	5	0	700	629	14.2	13.2	3.34	2.53	0.57	21.40	15	54	1
							12	700	603	14.4	13.5	3.24	2.45	0.56	20.20	15	54	1
				5.5	14.5	9	0	700	629	16.8	15.9	1.84	1.39	0.29	9.20	15	54	1
							12	700	603	17	16.2	1.78	1.35	0.28	8.20	15	54	1
		27	19	7	12	5	0	700	629	14	13.1	3.40	2.59	0.58	20.60	15	54	1
							12	700	603	14.3	13.6	3.30	2.50	0.57	19.60	15	54	1
				5.5	14.5	9	0	700	629	16.7	15.8	1.87	1.42	0.29	8.40	15	54	1
							12	700	603	16.9	16	1.82	1.38	0.29	7.60	15	54	1
		29	21	7	12	5	0	700	629	14.2	13.3	4.18	2.89	0.72	22.40	15	54	1
							12	700	603	14.5	13.7	4.05	2.79	0.70	20.80	15	54	1
				5.5	14.5	9	0	700	629	17.5	16.2	2.30	1.59	0.36	10.40	15	54	1
							12	700	603	18	17.1	2.23	1.53	0.35	9.00	15	54	1
	Low	26.7	19.4	7	12	5	0	580	522	13.6	12.7	2.91	2.18	0.50	20.78	15	44	1
							12	580	499	13.9	13	2.81	2.10	0.48	19.61	15	44	1
				5.5	14.5	9	0	580	522	16.7	15.5	1.60	1.20	0.25	8.93	15	44	1
							12	580	499	17	16	1.55	1.16	0.24	7.96	15	44	1
		27	19	7	12	5	0	580	522	13.8	12.9	2.96	2.22	0.51	20.00	15	44	1
							12	580	499	14.1	13.4	2.86	2.14	0.49	19.03	15	44	1
				5.5	14.5	9	0	580	522	16.5	15.4	1.63	1.22	0.26	8.16	15	44	1
							12	580	499	16.7	15.7	1.57	1.18	0.25	7.38	15	44	1
		29	21	7	12	5	0	580	522	13.5	12.6	3.62	2.48	0.62	21.75	15	44	1
							12	580	499	13.8	13	3.50	2.39	0.60	20.19	15	44	1
				5.5	14.5	9	0	580	522	17.3	16.3	1.99	1.36	0.31	10.10	15	44	1
							12	580	499	17.6	16.7	1.93	1.31	0.30	8.74	15	44	1
MKT2-500(E)	High	26.7	19.4	7	12	5	0	855	925	14.4	13.7	4.70	3.69	0.81	13.80	19	77	1
							12	855	849	14.6	13.9	4.42	3.44	0.76	13.03	19	77	1
				5.5	14.5	9	0	855	925	17.3	16.2	2.59	2.03	0.41	5.93	19	77	1
							12	855	849	17.6	16.6	2.43	1.89	0.38	5.29	19	77	1
		27	19	7	12	5	0	855	925	14.6	13.6	4.78	3.77	0.82	13.29	19	77	1
							12	855	849	14.8	13.9	4.49	3.52	0.77	12.70	19	77	1
				5.5	14.5	9	0	855	925	16.9	16.3	2.63	2.07	0.41	5.42	19	77	1
							12	855	849	17.1	16.2	2.47	1.94	0.39	4.90	19	77	1
		29	21	7	12	5	0	855	925	14.7	13.8	5.93	4.22	1.02	14.45	19	77	1
							12	855	849	15	14	5.57	3.94	0.96	13.42	19	77	1
				5.5	14.5	9	0	855	925	18.2	17.1	3.26	2.32	0.51	6.71	19	77	1
							12	855	849	18.4	17.4	3.06	2.17	0.48	5.81	19	77	1
	Mid	26.7	19.4	7	12	5	0	660	719	14.2	13.2	3.91	3.01	0.67	13.53	19	61	1
							12	660	660	14.4	13.5	3.67	2.81	0.63	12.77	19	61	1

				5.5	14.5	9	0	660	719	16.8	15.9	2.15	1.66	0.34	5.82	19	61	1
							12	660	660	17	16.2	2.02	1.55	0.32	5.19	19	61	1
		27	19	7	12	5	0	660	719	14	13.1	3.98	3.08	0.68	13.03	19	61	1
							12	660	660	14.3	13.6	3.74	2.87	0.64	12.39	19	61	1
				5.5	14.5	9	0	660	719	16.7	15.8	2.19	1.69	0.34	5.31	19	61	1
							12	660	660	16.9	16	2.06	1.58	0.32	4.81	19	61	1
		29	21	7	12	5	0	660	719	14.2	13.3	4.92	3.44	0.84	14.16	19	61	1
							12	660	660	14.5	13.7	4.61	3.21	0.79	13.15	19	61	1
				5.5	14.5	9	0	660	719	17.5	16.2	2.71	1.89	0.42	6.58	19	61	1
							12	660	660	18	17.1	2.54	1.77	0.40	5.69	19	61	1
	Low	26.7	19.4	7	12	5	0	475	517	13.6	12.7	3.06	2.30	0.53	13.14	19	50	1
							12	475	474	13.9	13	2.87	2.14	0.49	12.40	19	50	1
				5.5	14.5	9	0	475	517	16.7	15.5	1.68	1.27	0.27	5.65	19	50	1
							12	475	474	17	16	1.58	1.18	0.25	5.03	19	50	1
		27	19	7	12	5	0	475	517	13.8	12.9	3.12	2.35	0.54	12.65	19	50	1
							12	475	474	14.1	13.4	2.92	2.19	0.50	12.03	19	50	1
				5.5	14.5	9	0	475	517	16.5	15.4	1.72	1.29	0.27	5.16	19	50	1
							12	475	474	16.7	15.7	1.61	1.20	0.25	4.67	19	50	1
		29	21	7	12	5	0	475	517	13.5	12.6	2.83	2.63	0.66	13.75	19	50	1
							12	475	474	13.8	13	3.58	2.44	0.62	12.77	19	50	1
				5.5	14.5	9	0	475	517	17.3	16.3	1.56	1.45	0.33	6.38	19	50	1
							12	475	474	17.6	16.7	1.97	1.34	0.31	5.53	19	50	1
MKT2-600(E)	High	26.7	19.4	7	12	5	0	980	1111	14.4	13.7	5.66	4.51	0.97	19.19	19	97.5	1
							12	980	1019	14.6	13.9	5.32	4.21	0.91	18.11	19	97.5	1
				5.5	14.5	9	0	980	1111	17.3	16.2	3.11	2.48	0.49	8.25	19	97.5	1
							12	980	1019	17.6	16.6	2.93	2.32	0.46	7.35	19	97.5	1
		27	19	7	12	5	0	980	1111	14.6	13.6	5.76	4.61	0.99	18.47	19	97.5	1
							12	980	1019	14.8	13.9	5.41	4.30	0.93	17.50	19	97.5	1
				5.5	14.5	9	0	980	1111	16.9	16.3	3.17	2.54	0.50	7.53	19	97.5	1
							12	980	1019	17.1	16.2	2.98	2.37	0.47	6.81	19	97.5	1
		29	21	7	12	5	0	980	1111	14.7	13.8	7.16	5.16	1.23	20.08	19	97.5	1
							12	980	1019	15	14	6.72	4.82	1.16	18.65	19	97.5	1
				5.5	14.5	9	0	980	1111	18.2	17.1	3.94	2.84	0.62	9.32	19	97.5	1
							12	980	1019	18.4	17.4	3.70	2.65	0.58	8.07	19	97.5	1
	Mid	26.7	19.4	7	12	5	0	780	846	14.2	13.2	4.65	3.62	0.80	18.81	19	74	1
							12	780	776	14.4	13.5	4.37	3.38	0.75	17.76	19	74	1
				5.5	14.5	9	0	780	846	16.8	15.9	2.56	1.99	0.40	8.09	19	74	1
							12	780	776	17	16.2	2.40	1.86	0.38	7.21	19	74	1
		27	19	7	12	5	0	780	846	14	13.1	4.73	3.70	0.81	18.11	19	74	1
							12	780	776	14.3	13.6	4.44	3.45	0.76	17.23	19	74	1
				5.5	14.5	9	0	780	846	16.7	15.8	2.60	2.04	0.41	7.38	19	74	1
							12	780	776	16.9	16	2.44	1.90	0.38	6.68	19	74	1
		29	21	7	12	5	0	780	846	14.2	13.3	5.86	4.14	1.01	19.69	19	74	1

							12	780	776	14.5	13.7	5.49	3.86	0.94	18.28	19	74	1
				5.5	14.5	9	0	780	846	17.5	16.2	3.22	2.28	0.51	9.14	19	74	1
							12	780	776	18	17.1	3.02	2.12	0.47	7.91	19	74	1
				7	12	5	0	540	611	13.6	12.7	3.66	2.78	0.63	18.26	19	58	1
							12	540	561	13.9	13	3.44	2.60	0.59	17.24	19	58	1
		26.7	19.4	5.5	14.5	9	0	540	611	16.7	15.5	2.01	1.53	0.32	7.85	19	58	1
							12	540	561	17	16	1.89	1.43	0.30	7.00	19	58	1
				7	12	5	0	540	611	13.8	12.9	3.72	2.84	0.64	17.58	19	58	1
	Low						12	540	561	14.1	13.4	3.49	2.65	0.60	16.73	19	58	1
		27	19	5.5	14.5	9	0	540	611	16.5	15.4	2.05	1.56	0.32	7.17	19	58	1
							12	540	561	16.7	15.7	1.92	1.46	0.30	6.49	19	58	1
				7	12	5	0	540	611	13.5	12.6	4.59	3.18	0.79	19.12	19	58	1
							12	540	561	13.8	13	4.30	2.96	0.74	17.75	19	58	1
		29	21	5.5	14.5	9	0	540	611	17.3	16.3	2.52	1.75	0.40	8.88	19	58	1
							12	540	561	17.6	16.7	2.37	1.63	0.37	7.68	19	58	1
MKT2-800(E)				7	12	5	0	860	1481	14.4	13.7	7.52	5.99	1.29	15.78	27	71.5	2
							12	860	1359	14.6	13.9	7.07	5.59	1.21	14.89	27	71.5	2
		26.7	19.4	5.5	14.5	9	0	860	1481	17.3	16.2	4.14	3.29	0.65	6.78	27	71.5	2
							12	860	1359	17.6	16.6	3.89	3.07	0.61	6.05	27	71.5	2
				7	12	5	0	860	1481	14.6	13.6	7.65	6.12	1.32	15.19	27	71.5	2
	High						12	860	1359	14.8	13.9	7.19	5.71	1.24	14.45	27	71.5	2
		27	19	5.5	14.5	9	0	860	1481	16.9	16.3	4.21	3.37	0.66	6.19	27	71.5	2
							12	860	1359	17.1	16.2	3.95	3.14	0.62	5.60	27	71.5	2
				7	12	5	0	860	1481	14.7	13.8	9.52	6.86	1.64	16.51	27	71.5	2
							12	860	1359	15	14	8.94	6.40	1.54	15.33	27	71.5	2
		29	21	5.5	14.5	9	0	860	1481	18.2	17.1	5.24	3.77	0.82	7.67	27	71.5	2
							12	860	1359	18.4	17.4	4.92	3.52	0.77	6.64	27	71.5	2
				7	12	5	0	675	1162	14.2	13.2	6.31	4.93	1.08	15.47	27	60	2
							12	675	1066	14.4	13.5	5.93	4.60	1.02	14.60	27	60	2
		26.7	19.4	5.5	14.5	9	0	675	1162	16.8	15.9	3.47	2.71	0.54	6.65	27	60	2
							12	675	1066	17	16.2	3.26	2.53	0.51	5.93	27	60	2
				7	12	5	0	675	1162	14	13.1	6.42	5.04	1.10	14.89	27	60	2
	Mid						12	675	1066	14.3	13.6	6.03	4.70	1.04	14.17	27	60	2
		27	19	5.5	14.5	9	0	675	1162	16.7	15.8	3.53	2.77	0.55	6.07	27	60	2
							12	675	1066	16.9	16	3.32	2.59	0.52	5.49	27	60	2
				7	12	5	0	675	1162	14.2	13.3	7.96	5.64	1.37	16.19	27	60	2
							12	675	1066	14.5	13.7	7.47	5.26	1.28	15.03	27	60	2
		29	21	5.5	14.5	9	0	675	1162	17.5	16.2	4.38	3.10	0.69	7.52	27	60	2
							12	675	1066	18	17.1	4.11	2.89	0.64	6.51	27	60	2
	Low			7	12	5	0	520	895	13.6	12.7	5.22	3.99	0.90	15.02	27	50	2
							12	520	822	13.9	13	4.90	3.73	0.84	14.17	27	50	2
		26.7	19.4	5.5	14.5	9	0	520	895	16.7	15.5	2.87	2.19	0.45	6.46	27	50	2
							12	520	822	17	16	2.70	2.05	0.42	5.75	27	50	2

		27	19	7	12	5	0	520	895	13.8	12.9	5.31	4.08	0.91	14.46	27	50	2
							12	520	822	14.1	13.4	4.98	3.81	0.86	13.75	27	50	2
				5.5	14.5	9	0	520	895	16.5	15.4	2.92	2.24	0.46	5.89	27	50	2
							12	520	822	16.7	15.7	2.74	2.10	0.43	5.33	27	50	2
		29	21	7	12	5	0	520	895	13.5	12.6	6.55	4.56	1.12	15.72	27	50	2
							12	520	822	13.8	13	6.14	4.26	1.05	14.60	27	50	2
				5.5	14.5	9	0	520	895	17.3	16.3	3.60	2.51	0.56	7.30	27	50	2
							12	520	822	17.6	16.7	3.38	2.34	0.53	6.32	27	50	2
MKT2-1000(E)	High	26.7	19.4	7	12	5	0	1010	1761	14.4	13.7	10.68	8.40	1.84	22.45	29	84.5	2
							12	1010	1700	14.6	13.9	10.42	8.17	1.79	21.19	29	84.5	2
				5.5	14.5	9	0	1010	1761	17.3	16.2	5.87	4.62	0.92	9.65	29	84.5	2
							12	1010	1700	17.6	16.6	5.73	4.49	0.90	8.60	29	84.5	2
		27	19	7	12	5	0	1010	1761	14.6	13.6	10.87	8.59	1.87	21.61	29	84.5	2
							12	1010	1700	14.8	13.9	10.60	8.35	1.82	20.50	29	84.5	2
				5.5	14.5	9	0	1010	1761	16.9	16.3	5.98	4.72	0.94	8.81	29	84.5	2
							12	1010	1700	17.1	16.2	5.83	4.59	0.91	7.97	29	84.5	2
		29	21	7	12	5	0	1010	1761	14.7	13.8	13.48	9.61	2.32	23.50	29	84.5	2
							12	1010	1700	15	14	13.13	9.34	2.26	21.82	29	84.5	2
				5.5	14.5	9	0	1010	1761	18.2	17.1	7.41	5.29	1.16	10.91	29	84.5	2
							12	1010	1700	18.4	17.4	7.22	5.14	1.13	9.44	29	84.5	2
	Mid	26.7	19.4	7	12	5	0	760	1325	14.2	13.2	8.69	6.69	1.49	22.01	29	66.5	2
							12	760	1279	14.4	13.5	8.47	6.50	1.46	20.78	29	66.5	2
				5.5	14.5	9	0	760	1325	16.8	15.9	4.78	3.68	0.75	9.46	29	66.5	2
							12	760	1279	17	16.2	4.66	3.58	0.73	8.43	29	66.5	2
		27	19	7	12	5	0	760	1325	14	13.1	8.84	6.83	1.52	21.19	29	66.5	2
							12	760	1279	14.3	13.6	8.61	6.64	1.48	20.16	29	66.5	2
				5.5	14.5	9	0	760	1325	16.7	15.8	4.86	3.76	0.76	8.64	29	66.5	2
							12	760	1279	16.9	16	4.74	3.65	0.74	7.82	29	66.5	2
		29	21	7	12	5	0	760	1325	14.2	13.3	10.91	7.64	1.87	23.04	29	66.5	2
							12	760	1279	14.5	13.7	10.62	7.43	1.82	21.39	29	66.5	2
				5.5	14.5	9	0	760	1325	17.5	16.2	6.00	4.20	0.94	10.70	29	66.5	2
							12	760	1279	18	17.1	5.84	4.09	0.91	9.26	29	66.5	2
	Low	26.7	19.4	7	12	5	0	550	959	13.6	12.7	6.84	5.14	1.18	21.37	29	55	2
							12	550	925	13.9	13	6.66	5.00	1.14	20.17	29	55	2
				5.5	14.5	9	0	550	959	16.7	15.5	3.76	2.83	0.59	9.19	29	55	2
							12	550	925	17	16	3.66	2.75	0.57	8.19	29	55	2
		27	19	7	12	5	0	550	959	13.8	12.9	6.96	5.25	1.20	20.57	29	55	2
							12	550	925	14.1	13.4	6.77	5.10	1.16	19.57	29	55	2
				5.5	14.5	9	0	550	959	16.5	15.4	3.83	2.89	0.60	8.39	29	55	2
							12	550	925	16.7	15.7	3.72	2.81	0.58	7.59	29	55	2
		29	21	7	12	5	0	550	959	13.5	12.6	8.54	5.87	1.47	22.37	29	55	2
							12	550	925	13.8	13	8.31	5.70	1.43	20.77	29	55	2
				5.5	14.5	9	0	550	959	17.3	16.3	4.70	3.23	0.74	10.39	29	55	2

							12	550	925	17.6	16.7	4.57	3.14	0.72	8.99	29	55	2
MKT2-1200(E)	High	26.7	19.4	7	12	5	0	985	2113	14.4	13.7	11.11	8.38	1.91	38.17	33	98	2
							12	985	2040	14.6	13.9	10.83	8.14	1.86	36.03	33	98	2
				5.5	14.5	9	0	985	2113	17.3	16.2	6.11	4.61	0.96	16.41	33	98	2
							12	985	2040	17.6	16.6	5.96	4.48	0.93	14.62	33	98	2
		27	19	7	12	5	0	985	2113	14.6	13.6	11.30	8.56	1.94	36.74	33	98	2
							12	985	2040	14.8	13.9	11.01	8.32	1.89	34.96	33	98	2
				5.5	14.5	9	0	985	2113	16.9	16.3	6.22	4.71	0.97	14.98	33	98	2
							12	985	2040	17.1	16.2	6.06	4.58	0.95	13.55	33	98	2
		29	21	7	12	5	0	985	2113	14.7	13.8	13.85	9.55	2.38	39.95	33	98	2
							12	985	2040	15	14	13.48	9.29	2.32	37.10	33	98	2
				5.5	14.5	9	0	985	2113	18.2	17.1	7.62	5.25	1.19	18.55	33	98	2
							12	985	2040	18.4	17.4	7.41	5.11	1.16	16.05	33	98	2
	Mid	26.7	19.4	7	12	5	0	695	1553	14.2	13.2	8.83	6.53	1.52	37.42	33	72.8	2
							12	695	1499	14.4	13.5	8.59	6.34	1.48	35.32	33	72.8	2
				5.5	14.5	9	0	695	1553	16.8	15.9	4.86	3.59	0.76	16.09	33	72.8	2
							12	695	1499	17	16.2	4.72	3.49	0.74	14.34	33	72.8	2
		27	19	7	12	5	0	695	1553	14	13.1	8.97	6.67	1.54	36.02	33	72.8	2
							12	695	1499	14.3	13.6	8.73	6.48	1.50	34.27	33	72.8	2
				5.5	14.5	9	0	695	1553	16.7	15.8	4.93	3.67	0.77	14.69	33	72.8	2
							12	695	1499	16.9	16	4.80	3.56	0.75	13.29	33	72.8	2
		29	21	7	12	5	0	695	1553	14.2	13.3	10.94	7.44	1.88	39.17	33	72.8	2
							12	695	1499	14.5	13.7	10.65	7.22	1.83	36.37	33	72.8	2
				5.5	14.5	9	0	695	1553	17.5	16.2	6.02	4.09	0.94	18.18	33	72.8	2
							12	695	1499	18	17.1	5.86	3.97	0.92	15.74	33	72.8	2
	Low	26.7	19.4	7	12	5	0	495	1061	13.6	12.7	6.60	4.78	1.13	36.33	33	60	2
							12	495	1025	13.9	13	6.43	4.64	1.10	34.29	33	60	2
				5.5	14.5	9	0	495	1061	16.7	15.5	3.63	2.63	0.57	15.62	33	60	2
							12	495	1025	17	16	3.54	2.55	0.55	13.92	33	60	2
		27	19	7	12	5	0	495	1061	13.8	12.9	6.70	4.87	1.15	34.97	33	60	2
							12	495	1025	14.1	13.4	6.53	4.74	1.12	33.27	33	60	2
				5.5	14.5	9	0	495	1061	16.5	15.4	3.69	2.68	0.58	14.26	33	60	2
							12	495	1025	16.7	15.7	3.59	2.61	0.56	12.90	33	60	2
		29	21	7	12	5	0	495	1061	13.5	12.6	8.14	5.43	1.40	38.03	33	60	2
							12	495	1025	13.8	13	7.92	5.28	1.36	35.31	33	60	2
				5.5	14.5	9	0	495	1061	17.3	16.3	4.48	2.99	0.70	17.65	33	60	2
							12	495	1025	17.6	16.7	4.36	2.90	0.68	15.28	33	60	2
MKT2-1400(E)	High	26.7	19.4	7	12	5	0	1130	2465	14.4	13.7	13.06	11.27	2.24	43.62	34	115	2
							12	1130	2379	14.6	13.9	12.78	10.99	2.20	41.18	34	115	2
				5.5	14.5	9	0	1130	2465	17.3	16.2	7.18	6.20	1.12	18.75	34	115	2
							12	1130	2379	17.6	16.6	7.03	6.04	1.10	16.72	34	115	2
		27	19	7	12	5	0	1130	2465	14.6	13.6	13.31	11.53	2.29	41.99	34	115	2
							12	1130	2379	14.8	13.9	13.04	11.25	2.24	39.95	34	115	2

				5.5	14.5	9	0	1130	2465	16.9	16.3	7.32	6.34	1.15	17.12	34	115	2
							12	1130	2379	17.1	16.2	7.17	6.19	1.12	15.49	34	115	2
		29	21	7	12	5	0	1130	2465	14.7	13.8	16.69	12.88	2.87	45.66	34	115	2
							12	1130	2379	15	14	16.33	12.57	2.81	42.40	34	115	2
				5.5	14.5	9	0	1130	2465	18.2	17.1	9.18	7.08	1.44	21.20	34	115	2
							12	1130	2379	18.4	17.4	8.98	6.91	1.41	18.35	34	115	2
	Mid	26.7	19.4	7	12	5	0	960	2104	14.2	13.2	11.88	10.08	2.04	42.77	34	101	2
							12	960	2031	14.4	13.5	11.63	9.83	2.00	40.37	34	101	2
				5.5	14.5	9	0	960	2104	16.8	15.9	6.53	5.54	1.02	18.39	34	101	2
							12	960	2031	17	16.2	6.40	5.41	1.00	16.39	34	101	2
		27	19	7	12	5	0	960	2104	14	13.1	12.11	10.32	2.08	41.17	34	101	2
							12	960	2031	14.3	13.6	11.86	10.06	2.04	39.17	34	101	2
				5.5	14.5	9	0	960	2104	16.7	15.8	6.66	5.68	1.04	16.79	34	101	2
							12	960	2031	16.9	16	6.52	5.53	1.02	15.19	34	101	2
		29	21	7	12	5	0	960	2104	14.2	13.3	15.14	11.52	2.60	44.77	34	101	2
							12	960	2031	14.5	13.7	14.81	11.24	2.54	41.57	34	101	2
				5.5	14.5	9	0	960	2104	17.5	16.2	8.33	6.34	1.30	20.78	34	101	2
							12	960	2031	18	17.1	8.15	6.18	1.27	17.99	34	101	2
	Low	26.7	19.4	7	12	5	0	775	1690	13.6	12.7	10.40	8.63	1.79	41.52	34	90	2
							12	775	1632	13.9	13	10.18	8.41	1.75	39.19	34	90	2
				5.5	14.5	9	0	775	1690	16.7	15.5	5.72	4.75	0.90	17.85	34	90	2
							12	775	1632	17	16	5.60	4.63	0.88	15.91	34	90	2
		27	19	7	12	5	0	775	1690	13.8	12.9	10.60	8.82	1.82	39.97	34	90	2
							12	775	1632	14.1	13.4	10.37	8.60	1.78	38.03	34	90	2
				5.5	14.5	9	0	775	1690	16.5	15.4	5.83	4.85	0.91	16.30	34	90	2
							12	775	1632	16.7	15.7	5.70	4.73	0.89	14.75	34	90	2
		29	21	7	12	5	0	775	1690	13.5	12.6	13.20	9.86	2.27	43.46	34	90	2
							12	775	1632	13.8	13	12.91	9.61	2.22	40.36	34	90	2
				5.5	14.5	9	0	775	1690	17.3	16.3	7.26	5.42	1.14	20.18	34	90	2
							12	775	1632	17.6	16.7	7.10	5.29	1.11	17.46	34	90	2

Remark:

ESP: external static pressure; **DB:** dry bulb temp.; **WB:** wet bulb temp.; **EWT:** enter water temp.;

LWT: leaving water temp.; **PWR:** power; **nos:** numbers. ;

For MKT2H models:

Model	Speed	Air On FCU		Water		Delta Water Temp.	ESP	Speed of Fan	Air Flow	Air Off FCU		Capacity		Water Flow	Water Pressure Drop	Weight	Input	
		DB	WB	EWT	LWT					DB	WB	Total	Sens.				PWR	Fan Motors
		℃	℃	℃	℃	℃	Pa	rpm	m^3/h	℃	℃	kW	kW	m^3/h	kPa	kg	W	nos.
MKT2H-200(E)	High	26.7	19.4	7	12	5	0	760	436	14.4	13.7	1.74	1.33	0.30	7.10	12	43.4	1
							30	760	380	14.6	13.9	1.69	1.28	0.29	6.70	12	43.4	1
				5.5	14.5	9	0	760	436	17.3	16.2	0.96	0.73	0.15	3.05	12	43.4	1
							30	760	380	17.6	16.6	0.93	0.70	0.15	2.72	12	43.4	1
		27	19	7	12	5	0	760	436	14.6	13.6	2.00	1.38	0.29	6.83	12	43.4	1
							30	760	380	14.8	13.9	1.90	1.33	0.28	6.50	12	43.4	1
				5.5	14.5	9	0	760	436	16.9	16.3	0.91	0.76	0.14	2.79	12	43.4	1
							30	760	380	17.1	16.2	0.88	0.73	0.14	2.52	12	43.4	1
		29	21	7	12	5	0	760	436	14.7	13.8	2.18	1.52	0.38	7.43	12	43.4	1
							30	760	380	15	14	2.11	1.47	0.36	6.90	12	43.4	1
				5.5	14.5	9	0	760	436	18.2	17.1	1.20	0.84	0.19	3.45	12	43.4	1
							30	760	380	18.4	17.4	1.16	0.81	0.18	2.99	12	43.4	1
	Mid	26.7	19.4	7	12	5	0	570	349	14.2	13.2	1.59	1.20	0.27	6.96	12	35	1
							30	570	304	14.4	13.5	1.54	1.17	0.27	6.57	12	35	1
				5.5	14.5	9	0	570	349	16.8	15.9	0.87	0.66	0.14	2.99	12	35	1
							30	570	304	17	16.2	0.85	0.64	0.13	2.67	12	35	1
		27	19	7	12	5	0	570	349	14	13.1	1.51	1.25	0.26	6.70	12	35	1
							30	570	304	14.3	13.6	1.47	1.20	0.25	6.38	12	35	1
				5.5	14.5	9	0	570	349	16.7	15.8	0.83	0.69	0.13	2.73	12	35	1
							30	570	304	16.9	16	0.81	0.66	0.13	2.47	12	35	1
		29	21	7	12	5	0	570	349	14.2	13.3	1.99	1.38	0.34	7.29	12	35	1
							30	570	304	14.5	13.7	1.93	1.33	0.33	6.77	12	35	1
				5.5	14.5	9	0	570	349	17.5	16.2	1.09	0.76	0.17	3.38	12	35	1
							30	570	304	18	17.1	1.06	0.73	0.17	2.93	12	35	1
	Low	26.7	19.4	7	12	5	0	475	244	13.6	12.7	1.39	1.04	0.24	6.76	12	30	1
							30	475	213	13.9	13	1.34	1.00	0.23	6.38	12	30	1
				5.5	14.5	9	0	475	244	16.7	15.5	0.76	0.57	0.12	2.91	12	30	1
							30	475	213	17	16	0.74	0.55	0.11	2.59	12	30	1
		27	19	7	12	5	0	475	244	13.8	12.9	1.31	1.07	0.23	6.51	12	30	1
							30	475	213	14.1	13.4	1.27	1.03	0.22	6.19	12	30	1
				5.5	14.5	9	0	475	244	16.5	15.4	0.72	0.59	0.11	2.65	12	30	1
							30	475	213	16.7	15.7	0.70	0.57	0.11	2.40	12	30	1
		29	21	7	12	5	0	475	244	13.5	12.6	1.72	1.18	0.30	7.07	12	30	1
							30	475	213	13.8	13	1.67	1.14	0.29	6.57	12	30	1
				5.5	14.5	9	0	475	244	17.3	16.3	0.95	0.65	0.15	3.28	12	30	1
							30	475	213	17.6	16.7	0.92	0.63	0.14	2.84	12	30	1

MKT2H-300(E)	High	26.7	19.4	7	12	5	0	802	555	14.4	13.7	2.83	2.22	0.49	14.41	13	61.2	1
							30	802	510	14.6	13.9	2.66	2.07	0.46	13.60	13	61.2	1
				5.5	14.5	9	0	802	555	17.3	16.2	1.56	1.22	0.25	6.19	13	61.2	1
							30	802	510	17.6	16.6	1.46	1.14	0.23	5.52	13	61.2	1
		27	19	7	12	5	0	802	555	14.6	13.6	2.88	2.27	0.49	13.87	13	61.2	1
							30	802	510	14.8	13.9	2.70	2.12	0.46	13.19	13	61.2	1
				5.5	14.5	9	0	802	555	16.9	16.3	1.58	1.25	0.25	5.65	13	61.2	1
							30	802	510	17.1	16.2	1.49	1.17	0.23	5.12	13	61.2	1
		29	21	7	12	5	0	802	555	14.7	13.8	3.57	2.54	0.61	15.08	13	61.2	1
							30	802	510	15	14	3.35	2.37	0.58	14.00	13	61.2	1
				5.5	14.5	9	0	802	555	18.2	17.1	1.96	1.40	0.31	7.00	13	61.2	1
							30	802	510	18.4	17.4	1.84	1.30	0.29	6.06	13	61.2	1
	Mid	26.7	19.4	7	12	5	0	608	421	14.2	13.2	2.40	2.04	0.41	14.12	13	51.2	1
							30	608	387	14.4	13.5	2.33	1.97	0.39	13.33	13	51.2	1
				5.5	14.5	9	0	608	421	16.8	15.9	1.32	1.12	0.21	6.07	13	51.2	1
							30	608	387	17	16.2	1.28	1.08	0.20	5.41	13	51.2	1
		27	19	7	12	5	0	608	421	14	13.1	2.31	2.10	0.38	13.60	13	51.2	1
							30	608	387	14.3	13.6	2.24	2.03	0.37	12.94	13	51.2	1
				5.5	14.5	9	0	608	421	16.7	15.8	1.27	1.16	0.19	5.54	13	51.2	1
							30	608	387	16.9	16	1.23	1.12	0.19	5.02	13	51.2	1
		29	21	7	12	5	0	608	421	14.2	13.3	2.90	2.03	0.50	14.78	13	51.2	1
							30	608	387	14.5	13.7	2.72	1.89	0.47	13.73	13	51.2	1
				5.5	14.5	9	0	608	421	17.5	16.2	1.60	1.12	0.25	6.86	13	51.2	1
							30	608	387	18	17.1	1.50	1.04	0.24	5.94	13	51.2	1
	Low	26.7	19.4	7	12	5	0	455	380	13.6	12.7	2.28	1.94	0.38	13.71	13	42.3	1
							30	455	350	13.9	13	2.22	1.87	0.37	12.94	13	42.3	1
				5.5	14.5	9	0	455	380	16.7	15.5	1.25	1.07	0.19	5.90	13	42.3	1
							30	455	350	17	16	1.22	1.03	0.19	5.25	13	42.3	1
		27	19	7	12	5	0	455	380	13.8	12.9	2.19	2.00	0.36	13.20	13	42.3	1
							30	455	350	14.1	13.4	2.13	1.98	0.35	12.56	13	42.3	1
				5.5	14.5	9	0	455	380	16.5	15.4	1.20	1.10	0.18	5.38	13	42.3	1
							30	455	350	16.7	15.7	1.17	1.09	0.18	4.87	13	42.3	1
		29	21	7	12	5	0	455	380	13.5	12.6	2.80	2.25	0.46	14.35	13	42.3	1
							30	455	350	13.8	13	2.73	2.13	0.45	13.33	13	42.3	1
				5.5	14.5	9	0	455	380	17.3	16.3	1.54	1.24	0.23	6.66	13	42.3	1
							30	455	350	17.6	16.7	1.50	1.17	0.23	5.77	13	42.3	1
MKT2H-400(E)	High	26.7	19.4	7	12	5	0	840	740	14.4	13.7	3.77	2.89	0.65	21.83	15	78.6	1
							30	840	680	14.6	13.9	3.54	2.70	0.61	20.60	15	78.6	1
				5.5	14.5	9	0	840	740	17.3	16.2	2.07	1.59	0.33	9.38	15	78.6	1
							30	840	680	17.6	16.6	1.95	1.49	0.31	8.36	15	78.6	1
		27	19	7	12	5	0	840	740	14.6	13.6	3.83	2.95	0.66	21.01	15	78.6	1
							30	840	680	14.8	13.9	3.60	2.76	0.62	19.99	15	78.6	1
				5.5	14.5	9	0	840	740	16.9	16.3	2.11	1.62	0.33	8.57	15	78.6	1

							30	840	680	17.1	16.2	1.98	1.52	0.31	7.75	15	78.6	1
		29	21	7	12	5	0	840	740	14.7	13.8	4.72	3.30	0.81	22.85	15	78.6	1
							30	840	680	15	14	4.43	3.08	0.76	21.22	15	78.6	1
				5.5	14.5	9	0	840	740	18.2	17.1	2.60	1.82	0.41	10.61	15	78.6	1
							30	840	680	18.4	17.4	2.44	1.69	0.38	9.18	15	78.6	1
	Mid	26.7	19.4	7	12	5	0	645	568	14.2	13.2	3.10	2.33	0.53	21.40	15	66	1
							30	645	522	14.4	13.5	2.91	2.18	0.50	20.20	15	66	1
				5.5	14.5	9	0	645	568	16.8	15.9	1.71	1.28	0.27	9.20	15	66	1
							30	645	522	17	16.2	1.60	1.20	0.25	8.20	15	66	1
		27	19	7	12	5	0	645	568	14	13.1	3.15	2.38	0.54	20.60	15	66	1
							30	645	522	14.3	13.6	2.96	2.22	0.51	19.60	15	66	1
				5.5	14.5	9	0	645	568	16.7	15.8	1.73	1.31	0.27	8.40	15	66	1
							30	645	522	16.9	16	1.63	1.22	0.26	7.60	15	66	1
		29	21	7	12	5	0	645	568	14.2	13.3	3.87	2.66	0.66	22.40	15	66	1
							30	645	522	14.5	13.7	3.62	2.48	0.62	20.80	15	66	1
				5.5	14.5	9	0	645	568	17.5	16.2	2.13	1.46	0.33	10.40	15	66	1
							30	645	522	18	17.1	1.99	1.36	0.31	9.00	15	66	1
	Low	26.7	19.4	7	12	5	0	475	419	13.6	12.7	2.47	2.06	0.42	20.78	15	55.3	1
							30	475	385	13.9	13	2.34	1.75	0.40	19.61	15	55.3	1
				5.5	14.5	9	0	475	419	16.7	15.5	1.36	1.13	0.21	8.93	15	55.3	1
							30	475	385	17	16	1.28	1.05	0.20	7.96	15	55.3	1
		27	19	7	12	5	0	475	419	13.8	12.9	2.80	1.85	0.43	20.00	15	55.3	1
							30	475	385	14.1	13.4	2.23	1.81	0.38	19.03	15	55.3	1
				5.5	14.5	9	0	475	419	16.5	15.4	1.27	1.03	0.12	8.16	15	55.3	1
							30	475	385	16.7	15.7	1.23	1.00	0.11	7.38	15	55.3	1
		29	21	7	12	5	0	475	419	13.5	12.6	3.06	2.07	0.53	21.75	15	55.3	1
							30	475	385	13.8	13	2.86	1.93	0.49	20.19	15	55.3	1
				5.5	14.5	9	0	475	419	17.3	16.3	1.68	1.14	0.27	10.10	15	55.3	1
							30	475	385	17.6	16.7	1.57	1.06	0.25	8.74	15	55.3	1
MKT2H-500(E)	High	26.7	19.4	7	12	5	0	875	925	14.4	13.7	4.70	3.69	0.81	12.60	19	89.3	1
							30	875	851	14.6	13.9	4.42	3.45	0.76	11.90	19	89.3	1
				5.5	14.5	9	0	875	925	17.3	16.2	2.59	2.03	0.41	5.42	19	89.3	1
							30	875	851	17.6	16.6	2.43	1.90	0.38	4.83	19	89.3	1
		27	19	7	12	5	0	875	925	14.6	13.6	4.78	3.77	0.82	12.13	19	89.3	1
							30	875	851	14.8	13.9	4.50	3.52	0.77	11.60	19	89.3	1
				5.5	14.5	9	0	875	925	16.9	16.3	2.63	2.07	0.41	4.95	19	89.3	1
							30	875	851	17.1	16.2	2.48	1.94	0.39	4.48	19	89.3	1
		29	21	7	12	5	0	875	925	14.7	13.8	5.93	4.22	1.02	13.19	19	89.3	1
							30	875	851	15	14	5.58	3.95	0.96	12.25	19	89.3	1
				5.5	14.5	9	0	875	925	18.2	17.1	3.26	2.32	0.51	6.12	19	89.3	1
							30	875	851	18.4	17.4	3.07	2.17	0.48	5.30	19	89.3	1
	Mid	26.7	19.4	7	12	5	0	645	682	14.2	13.2	3.76	2.88	0.65	12.36	19	75	1
							30	645	627	14.4	13.5	3.54	2.69	0.61	11.66	19	75	1

				5.5	14.5	9	0	645	682	16.8	15.9	2.07	1.58	0.33	5.31	19	75	1
							30	645	627	17	16.2	1.95	1.48	0.31	4.73	19	75	1
		27	19	7	12	5	0	645	682	14	13.1	3.83	2.95	0.66	11.89	19	75	1
							30	645	627	14.3	13.6	3.60	2.75	0.62	11.32	19	75	1
				5.5	14.5	9	0	645	682	16.7	15.8	2.11	1.62	0.33	4.85	19	75	1
							30	645	627	16.9	16	1.98	1.51	0.31	4.39	19	75	1
		29	21	7	12	5	0	645	682	14.2	13.3	4.72	3.30	0.81	12.93	19	75	1
							30	645	627	14.5	13.7	4.43	3.08	0.76	12.01	19	75	1
				5.5	14.5	9	0	645	682	17.5	16.2	2.60	1.82	0.41	6.00	19	75	1
							30	645	627	18	17.1	2.44	1.69	0.38	5.20	19	75	1
	Low	26.7	19.4	7	12	5	0	465	491	13.6	12.7	2.95	2.20	0.51	12.00	19	63	1
							30	465	452	13.9	13	2.77	2.06	0.48	11.32	19	63	1
				5.5	14.5	9	0	465	491	16.7	15.5	1.62	1.21	0.26	5.16	19	63	1
							30	465	452	17	16	1.52	1.13	0.24	4.60	19	63	1
		27	19	7	12	5	0	465	491	13.8	12.9	3.00	2.25	0.51	11.55	19	63	1
							30	465	452	14.1	13.4	2.82	2.10	0.48	10.99	19	63	1
				5.5	14.5	9	0	465	491	16.5	15.4	1.65	1.24	0.26	4.71	19	63	1
							30	465	452	16.7	15.7	1.55	1.16	0.24	4.26	19	63	1
		29	21	7	12	5	0	465	491	13.5	12.6	3.68	2.52	0.63	12.56	19	63	1
							30	465	452	13.8	13	3.45	2.35	0.59	11.66	19	63	1
				5.5	14.5	9	0	465	491	17.3	16.3	2.02	1.39	0.32	5.83	19	63	1
							30	465	452	17.6	16.7	1.90	1.29	0.30	5.04	19	63	1
MKT2H-600(E)																		
	High	26.7	19.4	7	12	5	0	975	1110	14.4	13.7	5.65	4.50	0.97	17.42	19	103	1
							30	975	1021	14.6	13.9	5.32	4.21	0.91	16.44	19	103	1
				5.5	14.5	9	0	975	1110	17.3	16.2	3.11	2.48	0.49	7.49	19	103	1
							30	975	1021	17.6	16.6	2.93	2.32	0.46	6.68	19	103	1
		27	19	7	12	5	0	975	1110	14.6	13.6	5.75	4.60	0.99	16.77	19	103	1
							30	975	1021	14.8	13.9	5.42	4.31	0.93	15.89	19	103	1
				5.5	14.5	9	0	975	1110	16.9	16.3	3.16	2.53	0.50	6.84	19	103	1
							30	975	1021	17.1	16.2	2.98	2.37	0.47	6.19	19	103	1
		29	21	7	12	5	0	975	1110	14.7	13.8	7.16	5.16	1.23	18.24	19	103	1
							30	975	1021	15	14	6.73	4.82	1.16	16.93	19	103	1
				5.5	14.5	9	0	975	1110	18.2	17.1	3.94	2.84	0.62	8.47	19	103	1
							30	975	1021	18.4	17.4	3.70	2.65	0.58	7.33	19	103	1
	Mid	26.7	19.4	7	12	5	0	750	854	14.2	13.2	4.68	3.65	0.80	17.08	19	81	1
							30	750	786	14.4	13.5	4.41	3.41	0.76	16.12	19	81	1
				5.5	14.5	9	0	750	854	16.8	15.9	2.57	2.01	0.40	7.34	19	81	1
							30	750	786	17	16.2	2.43	1.88	0.38	6.54	19	81	1
		27	19	7	12	5	0	750	854	14	13.1	4.76	3.73	0.82	16.44	19	81	1
							30	750	786	14.3	13.6	4.48	3.49	0.77	15.64	19	81	1
				5.5	14.5	9	0	750	854	16.7	15.8	2.62	2.05	0.41	6.70	19	81	1
							30	750	786	16.9	16	2.46	1.92	0.39	6.07	19	81	1
		29	21	7	12	5	0	750	854	14.2	13.3	5.90	4.18	1.01	17.88	19	81	1

							30	750	786	14.5	13.7	5.54	3.90	0.95	16.60	19	81	1
				5.5	14.5	9	0	750	854	17.5	16.2	3.25	2.30	0.51	8.30	19	81	1
							30	750	786	18	17.1	3.05	2.15	0.48	7.18	19	81	1
				7	12	5	0	535	609	13.6	12.7	3.65	2.78	0.63	16.58	19	69	1
							30	535	560	13.9	13	3.43	2.59	0.59	15.65	19	69	1
		26.7	19.4	5.5	14.5	9	0	535	609	16.7	15.5	2.01	1.53	0.32	7.13	19	69	1
							30	535	560	17	16	1.89	1.42	0.30	6.35	19	69	1
				7	12	5	0	535	609	13.8	12.9	3.71	2.83	0.64	15.96	19	69	1
	Low						30	535	560	14.1	13.4	3.49	2.65	0.60	15.19	19	69	1
		27	19	5.5	14.5	9	0	535	609	16.5	15.4	2.04	1.56	0.32	6.51	19	69	1
							30	535	560	16.7	15.7	1.92	1.46	0.30	5.89	19	69	1
				7	12	5	0	535	609	13.5	12.6	4.57	3.17	0.79	17.36	19	69	1
							30	535	560	13.8	13	4.29	2.96	0.74	16.12	19	69	1
		29	21	5.5	14.5	9	0	535	609	17.3	16.3	2.51	1.74	0.40	8.06	19	69	1
							30	535	560	17.6	16.7	2.36	1.63	0.37	6.97	19	69	1
MKT2H-800(E)				7	12	5	0	835	1480	14.4	13.7	7.51	5.99	1.29	15.11	27	78	2
							30	835	1361	14.6	13.9	7.08	5.60	1.22	14.27	27	78	2
		26.7	19.4	5.5	14.5	9	0	835	1480	17.3	16.2	4.13	3.29	0.65	6.50	27	78	2
							30	835	1361	17.6	16.6	3.89	3.08	0.61	5.79	27	78	2
				7	12	5	0	835	1480	14.6	13.6	7.65	6.12	1.31	14.55	27	78	2
	High						30	835	1361	14.8	13.9	7.20	5.72	1.24	13.84	27	78	2
		27	19	5.5	14.5	9	0	835	1480	16.9	16.3	4.21	3.37	0.66	5.93	27	78	2
							30	835	1361	17.1	16.2	3.96	3.15	0.62	5.37	27	78	2
				7	12	5	0	835	1480	14.7	13.8	9.52	6.85	1.64	15.82	27	78	2
							30	835	1361	15	14	8.95	6.41	1.54	14.69	27	78	2
		29	21	5.5	14.5	9	0	835	1480	18.2	17.1	5.24	3.77	0.82	7.35	27	78	2
							30	835	1361	18.4	17.4	4.92	3.53	0.77	6.36	27	78	2
				7	12	5	0	620	1099	14.2	13.2	6.06	4.71	1.04	14.82	27	62	2
							30	620	1011	14.4	13.5	5.71	4.41	0.98	13.99	27	62	2
		26.7	19.4	5.5	14.5	9	0	620	1099	16.8	15.9	3.33	2.59	0.52	6.37	27	62	2
							30	620	1011	17	16.2	3.14	2.43	0.49	5.68	27	62	2
				7	12	5	0	620	1099	14	13.1	6.17	4.82	1.06	14.26	27	62	2
	Mid						30	620	1011	14.3	13.6	5.81	4.50	1.00	13.57	27	62	2
		27	19	5.5	14.5	9	0	620	1099	16.7	15.8	3.39	2.65	0.53	5.82	27	62	2
							30	620	1011	16.9	16	3.20	2.48	0.50	5.26	27	62	2
				7	12	5	0	620	1099	14.2	13.3	7.64	5.39	1.31	15.51	27	62	2
							30	620	1011	14.5	13.7	7.17	5.04	1.23	14.40	27	62	2
		29	21	5.5	14.5	9	0	620	1099	17.5	16.2	4.20	2.96	0.66	7.20	27	62	2
							30	620	1011	18	17.1	3.94	2.77	0.62	6.23	27	62	2
	Low			7	12	5	0	465	823	13.6	12.7	4.91	3.73	0.84	14.39	27	53	2
							30	465	757	13.9	13	4.61	3.48	0.79	13.58	27	53	2
		26.7	19.4	5.5	14.5	9	0	465	823	16.7	15.5	2.70	2.05	0.42	6.18	27	53	2
							30	465	757	17	16	2.54	1.91	0.40	5.51	27	53	2

		27	19	7	12	5	0	465	823	13.8	12.9	4.99	3.81	0.86	13.85	27	53	2
							30	465	757	14.1	13.4	4.69	3.56	0.81	13.18	27	53	2
				5.5	14.5	9	0	465	823	16.5	15.4	2.74	2.10	0.43	5.65	27	53	2
							30	465	757	16.7	15.7	2.58	1.96	0.41	5.11	27	53	2
		29	21	7	12	5	0	465	823	13.5	12.6	6.14	4.26	1.06	15.06	27	53	2
							30	465	757	13.8	13	5.76	3.98	0.99	13.98	27	53	2
				5.5	14.5	9	0	465	823	17.3	16.3	3.38	2.34	0.53	6.99	27	53	2
							30	465	757	17.6	16.7	3.17	2.19	0.50	6.05	27	53	2
MKT2H-1000(E)		26.7	19.4	7	12	5	0	1050	1850	14.4	13.7	11.07	8.74	1.90	22.99	29	98.5	2
							30	1050	1702	14.6	13.9	10.43	8.18	1.79	21.70	29	98.5	2
				5.5	14.5	9	0	1050	1850	17.3	16.2	6.09	4.81	0.95	9.88	29	98.5	2
							30	1050	1702	17.6	16.6	5.74	4.50	0.90	8.81	29	98.5	2
	High	27	19	7	12	5	0	1050	1850	14.6	13.6	11.27	8.93	1.94	22.13	29	98.5	2
							30	1050	1702	14.8	13.9	10.61	8.36	1.82	20.99	29	98.5	2
				5.5	14.5	9	0	1050	1850	16.9	16.3	6.20	4.91	0.97	9.02	29	98.5	2
							30	1050	1702	17.1	16.2	5.84	4.60	0.91	8.16	29	98.5	2
		29	21	7	12	5	0	1050	1850	14.7	13.8	13.98	10.00	2.40	24.06	29	98.5	2
							30	1050	1702	15	14	13.14	9.35	2.26	22.34	29	98.5	2
				5.5	14.5	9	0	1050	1850	18.2	17.1	7.69	5.50	1.20	11.17	29	98.5	2
							30	1050	1702	18.4	17.4	7.23	5.14	1.13	9.67	29	98.5	2
		26.7	19.4	7	12	5	0	800	1409	14.2	13.2	9.09	7.03	1.56	22.54	29	87	2
							30	800	1296	14.4	13.5	8.55	6.57	1.47	21.27	29	87	2
				5.5	14.5	9	0	800	1409	16.8	15.9	5.00	3.87	0.78	9.69	29	87	2
							30	800	1296	17	16.2	4.70	3.61	0.74	8.64	29	87	2
	Mid	27	19	7	12	5	0	800	1409	14	13.1	9.25	7.18	1.59	21.70	29	87	2
							30	800	1296	14.3	13.6	8.70	6.71	1.49	20.64	29	87	2
				5.5	14.5	9	0	800	1409	16.7	15.8	5.09	3.95	0.80	8.85	29	87	2
							30	800	1296	16.9	16	4.79	3.69	0.75	8.00	29	87	2
		29	21	7	12	5	0	800	1409	14.2	13.3	11.42	8.03	1.96	23.59	29	87	2
							30	800	1296	14.5	13.7	10.73	7.51	1.84	21.91	29	87	2
				5.5	14.5	9	0	800	1409	17.5	16.2	6.28	4.42	0.98	10.95	29	87	2
							30	800	1296	18	17.1	5.90	4.13	0.92	9.48	29	87	2
	Low	26.7	19.4	7	12	5	0	570	1004	13.6	12.7	7.08	5.34	1.22	21.88	29	77	2
							30	570	924	13.9	13	6.66	4.99	1.14	20.65	29	77	2
				5.5	14.5	9	0	570	1004	16.7	15.5	3.89	2.94	0.61	9.41	29	77	2
							30	570	924	17	16	3.66	2.74	0.57	8.38	29	77	2
		27	19	7	12	5	0	570	1004	13.8	12.9	7.20	5.45	1.24	21.06	29	77	2
							30	570	924	14.1	13.4	6.77	5.10	1.16	20.04	29	77	2
				5.5	14.5	9	0	570	1004	16.5	15.4	3.96	3.00	0.62	8.59	29	77	2
							30	570	924	16.7	15.7	3.72	2.81	0.58	7.77	29	77	2
		29	21	7	12	5	0	570	1004	13.5	12.6	8.84	6.10	1.52	22.90	29	77	2
							30	570	924	13.8	13	8.30	5.69	1.43	21.27	29	77	2
				5.5	14.5	9	0	570	1004	17.3	16.3	4.86	3.36	0.76	10.63	29	77	2

							30	570	924	17.6	16.7	4.57	3.13	0.72	9.20	29	77	2
MKT2H-1200(E)	High	26.7	19.4	7	12	5	0	1035	2220	14.4	13.7	11.53	8.72	1.98	38.17	33	117	2
							30	1035	2042	14.6	13.9	10.84	8.15	1.86	36.03	33	117	2
				5.5	14.5	9	0	1035	2220	17.3	16.2	6.34	4.80	0.99	16.41	33	117	2
							30	1035	2042	17.6	16.6	5.96	4.48	0.93	14.62	33	117	2
		27	19	7	12	5	0	1035	2220	14.6	13.6	11.72	8.90	2.01	36.74	33	117	2
							30	1035	2042	14.8	13.9	11.01	8.32	1.89	34.96	33	117	2
				5.5	14.5	9	0	1035	2220	16.9	16.3	6.45	4.90	1.01	14.98	33	117	2
							30	1035	2042	17.1	16.2	6.06	4.58	0.95	13.55	33	117	2
		29	21	7	12	5	0	1035	2220	14.7	13.8	14.37	9.94	2.47	39.95	33	117	2
							30	1035	2042	15	14	13.49	9.29	2.32	37.10	33	117	2
				5.5	14.5	9	0	1035	2220	18.2	17.1	7.90	5.47	1.24	18.55	33	117	2
							30	1035	2042	18.4	17.4	7.42	5.11	1.16	16.05	33	117	2
	Mid	26.7	19.4	7	12	5	0	760	1630	14.2	13.2	9.15	6.79	1.57	37.42	33	98	2
							30	760	1499	14.4	13.5	8.59	6.34	1.48	35.32	33	98	2
				5.5	14.5	9	0	760	1630	16.8	15.9	5.03	3.73	0.79	16.09	33	98	2
							30	760	1499	17	16.2	4.72	3.49	0.74	14.34	33	98	2
		27	19	7	12	5	0	760	1630	14	13.1	9.30	6.93	1.60	36.02	33	98	2
							30	760	1499	14.3	13.6	8.73	6.48	1.50	34.27	33	98	2
				5.5	14.5	9	0	760	1630	16.7	15.8	5.12	3.81	0.80	14.69	33	98	2
							30	760	1499	16.9	16	4.80	3.56	0.75	13.29	33	98	2
		29	21	7	12	5	0	760	1630	14.2	13.3	11.36	7.74	1.95	39.17	33	98	2
							30	760	1499	14.5	13.7	10.65	7.22	1.83	36.37	33	98	2
				5.5	14.5	9	0	760	1630	17.5	16.2	6.25	4.26	0.98	18.18	33	98	2
							30	760	1499	18	17.1	5.86	3.97	0.92	15.74	33	98	2
	Low	26.7	19.4	7	12	5	0	545	1168	13.6	12.7	7.11	5.17	1.22	36.33	33	82	2
							30	545	1075	13.9	13	6.67	4.83	1.15	34.29	33	82	2
				5.5	14.5	9	0	545	1168	16.7	15.5	3.91	2.84	0.61	15.62	33	82	2
							30	545	1075	17	16	3.67	2.66	0.58	13.92	33	82	2
		27	19	7	12	5	0	545	1168	13.8	12.9	7.22	5.28	1.24	34.97	33	82	2
							30	545	1075	14.1	13.4	6.77	4.93	1.16	33.27	33	82	2
				5.5	14.5	9	0	545	1168	16.5	15.4	3.97	2.90	0.62	14.26	33	82	2
							30	545	1075	16.7	15.7	3.72	2.71	0.58	12.90	33	82	2
		29	21	7	12	5	0	545	1168	13.5	12.6	8.78	5.88	1.51	38.03	33	82	2
							30	545	1075	13.8	13	8.22	5.49	1.41	35.31	33	82	2
				5.5	14.5	9	0	545	1168	17.3	16.3	4.83	3.23	0.76	17.65	33	82	2
							30	545	1075	17.6	16.7	4.52	3.02	0.71	15.28	33	82	2
MKT2H-1400(E)	High	26.7	19.4	7	12	5	0	1165	2590	14.4	13.7	13.44	11.66	2.31	43.62	34	131	2
							30	1165	2383	14.6	13.9	12.79	11.01	2.20	41.18	34	131	2
				5.5	14.5	9	0	1165	2590	17.3	16.2	7.39	6.41	1.16	18.75	34	131	2
							30	1165	2383	17.6	16.6	7.03	6.06	1.10	16.72	34	131	2
		27	19	7	12	5	0	1165	2590	14.6	13.6	13.71	11.94	2.36	41.99	34	131	2
							30	1165	2383	14.8	13.9	13.05	11.26	2.24	39.95	34	131	2

				5.5	14.5	9	0	1165	2590	16.9	16.3	7.54	6.57	1.18	17.12	34	131	2
							30	1165	2383	17.1	16.2	7.18	6.19	1.12	15.49	34	131	2
		29	21	7	12	5	0	1165	2590	14.7	13.8	17.20	13.34	2.96	45.66	34	131	2
							30	1165	2383	15	14	16.35	12.58	2.81	42.40	34	131	2
				5.5	14.5	9	0	1165	2590	18.2	17.1	9.46	7.34	1.48	21.20	34	131	2
							30	1165	2383	18.4	17.4	8.99	6.92	1.41	18.35	34	131	2
	Mid	26.7	19.4	7	12	5	0	1090	2423	14.2	13.2	12.92	11.13	2.22	42.77	34	129	2
							30	1090	2229	14.4	13.5	12.29	10.50	2.11	40.37	34	129	2
				5.5	14.5	9	0	1090	2423	16.8	15.9	7.11	6.12	1.11	18.39	34	129	2
							30	1090	2229	17	16.2	6.76	5.78	1.06	16.39	34	129	2
		27	19	7	12	5	0	1090	2423	14	13.1	13.18	11.39	2.26	41.17	34	129	2
							30	1090	2229	14.3	13.6	12.54	10.75	2.15	39.17	34	129	2
				5.5	14.5	9	0	1090	2423	16.7	15.8	7.25	6.26	1.13	16.79	34	129	2
							30	1090	2229	16.9	16	6.90	5.91	1.08	15.19	34	129	2
		29	21	7	12	5	0	1090	2423	14.2	13.3	16.51	12.73	2.84	44.77	34	129	2
							30	1090	2229	14.5	13.7	15.69	12.00	2.69	41.57	34	129	2
				5.5	14.5	9	0	1090	2423	17.5	16.2	9.08	7.00	1.42	20.78	34	129	2
							30	1090	2229	18	17.1	8.63	6.60	1.35	17.99	34	129	2
	Low	26.7	19.4	7	12	5	0	860	1912	13.6	12.7	11.21	9.42	1.93	41.52	34	120	2
							30	860	1759	13.9	13	10.66	8.88	1.83	39.19	34	120	2
				5.5	14.5	9	0	860	1912	16.7	15.5	6.17	5.18	0.97	17.85	34	120	2
							30	860	1759	17	16	5.86	4.88	0.92	15.91	34	120	2
		27	19	7	12	5	0	860	1912	13.8	12.9	11.43	9.64	1.96	39.97	34	120	2
							30	860	1759	14.1	13.4	10.86	9.08	1.87	38.03	34	120	2
				5.5	14.5	9	0	860	1912	16.5	15.4	6.29	5.30	0.98	16.30	34	120	2
							30	860	1759	16.7	15.7	5.97	4.99	0.94	14.75	34	120	2
		29	21	7	12	5	0	860	1912	13.5	12.6	14.26	10.77	2.45	43.46	34	120	2
							30	860	1759	13.8	13	13.54	10.14	2.33	40.36	34	120	2
				5.5	14.5	9	0	860	1912	17.3	16.3	7.84	5.92	1.23	20.18	34	120	2
							30	860	1759	17.6	16.7	7.45	5.58	1.17	17.46	34	120	2

Remark:

ESP: external static pressure; **DB:** dry bulb temp.; **WB:** wet bulb temp.; **EWT:** enter water temp.;

LWT: leaving water temp.; **PWR:** power; **nos:** numbers. ;

Heating Capacity:
For MKT2 models:

Model	Air flow volume (Hi)	Water temp. change	Air inlet temp. (21℃ DB) / Water inlet temp. (℃)																							
			35			40			45			50			55			60			65			70		
			Capacity	Water flow volume	Water pressure drop	Capacity	Water flow volume	Water pressure drop	Capacity	Water flow volume	Water pressure drop	Capacity	Water flow volume	Water pressure drop	Capacity	Water flow volume	Water pressure drop	Capacity	Water flow volume	Water pressure drop	Capacity	Water flow volume	Water pressure drop	Capacity	Water flow volume	Water pressure drop
	m^3/h	℃	kW	m^3/h	kPa	kW	m^3/h	kPa	kW	m^3/h	kPa	kW	m^3/h	kPa	kW	m^3/h	kPa	kW	m^3/h	kPa	kW	m^3/h	kPa	kW	m^3/h	kPa
MKT2-200(E)	339	10	0.42	0.04	1.23	0.92	0.08	2.45	1.40	0.12	3.68	1.87	0.16	4.90	2.34	0.20	6.13	2.81	0.24	7.35	3.28	0.28	8.58	3.75	0.32	9.80
		8	0.62	0.07	2.14	1.10	0.12	3.68	1.57	0.17	5.21	2.04	0.22	6.74	2.51	0.27	8.27	2.98	0.32	9.80	3.45	0.37	11.33	3.92	0.42	12.86
		7	0.71	0.09	2.76	1.19	0.15	4.59	1.66	0.20	6.13	2.13	0.26	7.96	2.60	0.32	9.80	3.07	0.38	11.64	3.53	0.43	13.17	4.00	0.49	15.01
		6	0.80	0.11	3.37	1.27	0.18	5.51	1.74	0.25	7.66	2.21	0.32	9.80	2.68	0.38	11.64	3.15	0.45	13.78	3.62	0.52	15.93	4.09	0.58	17.76
		5	0.89	0.15	4.59	1.36	0.23	7.04	1.83	0.31	9.49	2.30	0.39	11.94	2.76	0.48	14.70	3.23	0.56	17.15	3.70	0.64	19.60	4.17	0.72	22.05
MKT2-300(E)	510	10	0.67	0.06	1.40	1.39	0.12	2.81	2.08	0.18	4.21	2.77	0.24	5.62	3.45	0.30	7.02	4.12	0.35	8.19	4.80	0.41	9.59	5.48	0.47	11.00
		8	0.94	0.10	2.34	1.64	0.18	4.21	2.32	0.25	5.85	3.00	0.32	7.49	3.68	0.40	9.36	4.36	0.47	11.00	5.03	0.54	12.64	5.71	0.61	14.27
		7	1.07	0.13	3.04	1.76	0.22	5.15	2.44	0.30	7.02	3.12	0.38	8.89	3.79	0.47	11.00	4.47	0.55	12.87	5.15	0.63	14.74	5.82	0.71	16.61
		6	1.19	0.17	3.98	1.88	0.27	6.32	2.56	0.37	8.66	3.23	0.46	10.76	3.91	0.56	13.10	4.58	0.66	15.44	5.26	0.75	17.55	5.94	0.85	19.89
		5	1.31	0.23	5.38	1.99	0.34	7.96	2.67	0.46	10.76	3.35	0.58	13.57	4.02	0.69	16.15	4.70	0.81	18.95	5.38	0.92	21.53	6.05	1.04	24.34
MKT2-400(E)	679	10	0.93	0.08	2.62	1.87	0.16	5.24	2.77	0.24	7.87	3.66	0.31	10.16	4.54	0.39	12.78	5.42	0.47	15.41	6.30	0.54	17.70	7.18	0.62	20.32
		8	1.27	0.14	4.59	2.18	0.23	7.54	3.07	0.33	10.82	3.95	0.42	13.77	4.83	0.52	17.05	8.71	0.61	20.00	6.59	0.71	23.27	7.46	0.80	26.22
		7	1.44	0.18	5.90	2.33	0.29	9.51	3.22	0.39	12.78	4.10	0.50	16.39	4.97	0.61	20.00	5.85	0.72	23.60	6.73	0.83	27.21	7.60	0.93	30.49
		6	1.59	0.23	7.54	2.48	0.35	11.47	3.36	0.48	15.73	4.24	0.61	20.00	5.11	0.73	23.93	5.99	0.86	28.19	6.87	0.98	32.12	7.75	1.11	36.39
		5	1.74	0.30	9.83	2.62	0.45	14.75	3.50	0.60	19.67	4.38	0.75	24.59	5.26	0.90	29.50	6.13	1.05	34.42	7.01	1.20	39.34	7.89	1.36	44.58
MKT2-500(E)	849	10	1.09	0.09	1.49	2.27	0.20	3.30	3.41	0.29	4.79	4.53	0.39	6.44	5.64	0.48	7.92	6.75	0.58	9.57	7.86	0.68	11.22	8.97	0.77	12.71
		8	1.54	0.17	2.81	2.68	0.29	4.79	3.80	0.41	6.77	4.91	0.53	8.75	6.02	0.65	10.73	7.13	0.77	12.71	8.24	0.88	14.52	9.35	1.00	16.50
		7	1.75	0.21	3.47	2.88	0.35	5.78	3.99	0.49	8.09	5.10	0.63	10.40	6.21	0.76	12.54	7.32	0.90	14.85	8.43	1.03	17.00	9.53	1.17	19.31
		6	1.95	0.28	4.62	3.07	0.44	7.26	4.19	0.60	9.90	5.29	0.76	12.54	6.40	0.92	15.18	7.51	1.08	17.82	8.62	1.23	20.30	9.72	1.39	22.94
		5	2.15	0.37	6.11	3.27	0.56	9.24	4.37	0.75	12.38	5.48	0.94	15.51	6.59	1.13	18.65	7.70	1.32	21.78	8.80	1.51	24.92	9.91	1.70	28.05
MKT2-600(E)	1019	10	1.22	0.10	1.99	2.56	0.22	4.38	3.86	0.33	6.57	5.15	0.44	8.76	6.43	0.55	10.95	7.71	0.66	13.13	8.98	0.77	15.32	10.26	0.88	17.51
		8	1.73	0.19	3.78	3.03	0.33	6.57	4.32	0.46	9.15	5.60	0.60	11.94	6.88	0.74	14.73	8.16	0.88	17.51	9.43	1.01	20.10	10.71	1.15	22.89
		7	1.97	0.24	4.78	3.27	0.40	7.96	4.55	0.56	11.14	5.83	0.72	14.33	7.11	0.87	17.31	8.38	1.03	20.50	9.66	1.19	23.68	10.94	1.34	26.67
		6	2.21	0.32	6.37	3.50	0.50	9.95	4.78	0.68	13.53	6.05	0.87	17.31	7.33	1.05	20.90	8.61	1.23	24.48	9.89	1.42	28.26	11.16	1.60	31.84
		5	2.44	0.42	8.36	3.73	0.64	12.74	5.00	0.86	17.11	6.28	1.08	21.49	7.56	1.30	25.87	8.83	1.52	30.25	10.11	1.74	34.63	11.39	1.96	39.00
MKT2-800(E)	1359	10	1.62	0.14	1.72	3.41	0.29	3.57	5.14	0.44	5.41	6.87	0.59	7.26	8.58	0.74	9.10	10.28	0.88	10.82	11.99	1.03	12.67	13.69	1.18	14.51
		8	2.31	0.25	3.08	4.05	0.43	5.29	5.77	0.62	7.63	7.48	0.80	9.84	9.18	0.99	12.18	10.89	1.17	14.39	12.59	1.35	16.61	14.29	1.54	18.94
		7	2.63	0.32	3.94	4.36	0.54	6.64	6.07	0.75	9.23	7.78	0.95	11.69	9.48	1.16	14.27	11.19	1.37	16.85	12.89	1.58	19.43	14.59	1.79	22.02
		6	2.95	0.42	5.17	4.67	0.67	8.24	6.38	0.91	11.19	8.08	1.16	14.27	9.78	1.40	17.22	11.49	1.64	20.17	13.19	1.89	23.25	14.90	2.13	26.20
		5	3.26	0.56	6.89	4.97	0.85	10.46	6.68	1.15	14.15	8.38	1.44	17.71	10.08	1.73	21.28	11.79	2.03	24.97	13.49	2.32	28.54	15.20	2.61	32.10
MKT2-1000(E)	1700	10	2.02	0.17	2.45	4.19	0.36	5.20	6.29	0.54	7.80	8.38	0.72	10.40	10.45	0.90	13.00	12.51	1.08	15.60	14.58	1.25	18.05	16.64	1.43	20.65
		8	2.84	0.31	4.48	4.95	0.53	7.65	7.03	0.76	10.97	9.10	0.98	14.15	11.17	1.20	17.33	13.23	1.42	20.50	15.30	1.64	23.68	17.36	1.86	26.86
		7	3.23	0.40	5.78	5.32	0.65	9.39	7.40	0.91	13.14	9.46	1.16	16.75	11.53	1.41	20.36	13.59	1.67	24.11	15.65	1.92	27.72	17.72	2.17	31.33
		6	3.61	0.52	7.51	5.69	0.81	11.70	7.76	1.11	16.03	9.82	1.41	20.36	11.88	1.70	24.55	13.95	2.00	28.88	16.01	2.29	33.07	18.08	2.59	37.40
		5	3.98	0.68	9.82	6.05	1.04	15.02	8.11	1.39	20.07	10.18	1.75	25.27	12.24	2.10	30.32	14.31	2.46	35.52	16.38	2.81	40.58	18.45	3.17	45.77
MKT2-1200(E)	2040	10	2.76	0.24	4.80	5.42	0.47	9.40	7.97	0.69	13.80	10.50	0.90	18.00	13.00	1.12	22.40	15.50	1.33	26.60	18.00	1.55	31.00	20.49	1.76	35.20
		8	3.71	0.40	8.00	6.28	0.67	13.40	8.80	0.94	18.80	11.30	1.21	24.20	13.80	1.48	29.60	16.29	1.75	35.00	18.79	2.02	40.40	21.28	2.29	45.80
		7	4.15	0.51	10.20	6.69	0.82	16.40	9.20	1.13	22.60	11.70	1.44	28.80	14.20	1.74	34.80	16.69	2.05	41.00	19.18	2.35	47.00	21.67	2.66	53.20
		6	4.58	0.66	13.20	7.10	1.02	20.40	9.60	1.38	27.60	12.10	1.73	34.60	14.59	2.09	41.80	17.08	2.45	49.00	19.58	2.80	56.00	22.07	3.16	63.20
		5	5.00	0.86	17.20	7.50	1.29	25.80	10.00	1.72	34.40	12.49	2.15	43.00	14.98	2.57	51.40	17.48	3.00	60.00	19.97	3.43	68.60	22.47	3.86	77.20
MKT2-1400(E)	2379	10	2.11	0.18	3.24	4.78	0.41	7.38	7.42	0.64	11.52	10.06	0.86	15.48	12.70	1.09	19.62	15.34	1.32	23.76	17.98	1.55	27.90	20.63	1.77	31.86
		8	3.19	0.34	6.12	5.83	0.63	11.34	8.47	0.91	16.38	11.11	1.19	21.42	13.75	1.48	26.64	16.40	1.76	31.68	19.04	2.05	36.90	21.70	2.33	41.94
		7	3.72	0.46	8.28	6.36	0.78	14.04	9.00	1.10	19.80	11.64	1.43	25.74	14.28	1.75	31.50	16.93	2.05	36.90	19.58	2.40	43.20	22.23	2.73	49.14
		6	4.24	0.61	10.98	6.88	0.99	17.82	9.52	1.36	24.48	12.17	1.74	31.32	14.81	2.12	38.16	17.47	2.50	45.00	20.12	2.88	51.84	22.78	3.26	58.68
		5	4.77	0.82	14.76	7.41	1.27	22.86	10.05	1.73	31.14	12.70	2.18	39.24	15.35	2.64	47.52	18.01	3.09	55.62	20.67	3.55	63.90	23.33	4.01	72.18

Heating capacity modification coefficient table:

Model	MKT2-200(E)	MKT2-300(E)	MKT2-400(E)	MKT2-500(E)	MKT2-600(E)	MKT2-800(E)	MKT2-1000(E)	MKT2-1200(E)	MKT2-1400(E)
Mid-speed	0.88	0.87	0.86	0.88	0.86	0.88	0.89	0.9	0.9
Low-speed	0.74	0.75	0.75	0.76	0.74	0.75	0.75	0.76	0.75

For MKT2H models:

Model	Air flow volume (Hi)	Water temp. change	Air inlet temp. (21℃ DB)																					
			Water inlet temp. (℃)																					
			35			40			45			50			55			60			65			70		
			Capacity	Water flow volume	Water pressure drop	Capacity	Water flow volume	Water pressure drop	Capacity	Water flow volume	Water pressure drop	Capacity	Water flow volume	Water pressure drop	Capacity	Water flow volume	Water pressure drop	Capacity	Water flow volume	Water pressure drop	Capacity	Water flow volume	Water pressure drop	Capacity	Water flow volume	Water pressure drop
	m^3/h	℃	kW	m^3/h	kPa	kW	m^3/h	kPa	kW	m^3/h	kPa	kW	m^3/h	kPa	kW	m^3/h	kPa	kW	m^3/h	kPa	kW	m^3/h	kPa	kW	m^3/h	kPa
MKT2H-200(E)	340	10	0.42	0.04	0.81	0.92	0.08	1.62	1.40	0.12	2.44	1.88	0.16	3.25	2.35	0.20	4.06	2.82	0.24	4.87	3.29	0.28	5.68	3.76	0.32	6.50
		8	0.62	0.07	1.42	1.10	0.12	2.44	1.58	0.17	3.45	2.05	0.22	4.47	2.52	0.27	5.48	2.99	0.32	6.50	3.46	0.37	7.51	3.93	0.42	8.53
		7	0.71	0.09	1.83	1.19	0.15	3.05	1.66	0.20	4.06	2.13	0.26	5.28	2.60	0.32	6.50	3.07	0.38	7.71	3.54	0.43	8.73	4.01	0.49	9.95
		6	0.80	0.11	2.23	1.28	0.18	3.65	1.75	0.25	5.08	2.22	0.32	6.50	2.69	0.38	7.71	3.16	0.45	9.14	3.63	0.52	10.56	4.09	0.59	11.98
		5	0.89	0.15	3.05	1.36	0.23	4.67	1.83	0.31	6.29	2.30	0.40	8.12	2.77	0.48	9.74	3.24	0.56	11.37	3.71	0.64	12.99	4.18	0.72	14.62
MKT2H-300(E)	510	10	0.67	0.06	1.68	1.39	0.12	3.36	2.08	0.18	5.04	2.77	0.24	6.72	3.45	0.30	8.40	4.12	0.35	9.80	4.80	0.41	11.48	5.48	0.47	13.16
		8	0.94	0.10	2.80	1.64	0.18	5.04	2.32	0.25	7.00	3.00	0.32	8.96	3.68	0.40	11.20	4.36	0.47	13.16	5.03	0.54	15.12	5.71	0.61	17.08
		7	1.07	0.13	3.64	1.76	0.22	6.16	2.44	0.30	8.40	3.12	0.38	10.64	3.79	0.47	13.16	4.47	0.55	15.40	5.15	0.63	17.64	5.82	0.71	19.88
		6	1.19	0.17	4.76	1.88	0.27	7.56	2.56	0.37	10.36	3.23	0.46	12.88	3.91	0.56	15.68	4.85	0.66	18.48	5.26	0.75	21.00	5.94	0.85	23.80
		5	1.31	0.23	6.44	1.99	0.34	9.52	2.67	0.46	12.88	3.35	0.58	16.24	4.02	0.69	19.32	4.70	0.81	22.68	5.38	0.92	25.76	6.05	1.04	29.12
MKT2H-400(E)	680	10	0.93	0.08	2.62	1.87	0.16	5.25	2.77	0.24	7.87	3.66	0.31	10.17	4.55	0.39	12.79	5.43	0.47	15.42	6.31	0.54	17.71	7.19	0.62	20.336
		8	1.28	0.14	4.59	2.18	0.23	7.54	3.07	0.33	10.82	3.96	0.42	13.78	4.84	0.52	17.06	5.71	0.61	20.01	6.59	0.71	23.29	7.47	0.80	26.24
		7	1.44	0.18	5.90	2.33	0.29	9.51	3.22	0.40	13.12	4.10	0.50	16.40	4.98	0.61	20.01	5.86	0.72	23.62	6.73	0.83	27.22	7.61	0.93	30.504
		6	1.59	0.23	7.54	2.48	0.36	11.81	3.36	0.48	15.74	4.42	0.61	20.01	5.12	0.73	23.94	6.00	0.86	28.21	6.88	0.98	32.14	7.75	1.11	36.408
		5	1.74	0.30	9.84	2.63	0.45	14.76	3.51	0.60	19.68	4.38	0.75	24.60	5.26	0.90	29.52	6.14	1.06	34.77	7.02	1.21	39.69	7.90	1.36	44.608
MKT2H-500(E)	851	10	1.10	0.09	1.36	2.27	0.20	3.02	3.41	0.29	4.38	4.54	0.39	5.89	5.65	0.49	7.40	6.77	0.58	8.76	7.88	0.68	10.27	8.99	0.77	11.63
		8	1.54	0.17	2.57	2.68	0.29	4.38	3.81	0.41	6.19	4.92	0.53	8.00	6.03	0.65	9.82	7.14	0.77	11.63	8.25	0.89	13.44	9.36	1.01	15.25
		7	1.75	0.22	3.32	2.88	0.35	5.29	4.00	0.49	7.40	5.11	0.63	9.51	6.22	0.76	11.48	7.33	0.90	13.59	8.44	1.04	15.70	9.55	1.17	17.67
		6	1.96	0.28	4.23	3.08	0.44	6.64	4.19	0.60	9.06	5.30	0.76	11.48	6.41	0.92	13.89	7.52	1.08	16.31	8.63	1.24	18.72	9.74	1.39	20.99
		5	2.16	0.37	5.59	3.27	0.56	8.46	4.38	0.75	11.33	5.49	0.94	14.19	6.60	1.13	17.06	7.71	1.32	19.93	8.82	1.52	22.95	9.93	1.71	25.82
MKT2H-600(E)	1021	10	1.22	0.10	1.81	2.56	0.22	3.97	3.86	0.33	5.96	5.15	0.44	7.95	6.44	0.55	9.93	7.72	0.66	11.95	9.00	0.77	13.91	10.28	0.88	15.89
		8	1.73	0.19	3.43	3.04	0.33	5.96	4.33	0.46	8.31	5.61	0.60	10.84	6.89	0.74	13.36	8.17	0.88	15.93	9.45	1.01	18.24	10.73	1.15	20.77
		7	1.98	0.24	4.33	3.27	0.40	7.22	4.56	0.56	10.11	5.84	0.72	13.00	7.12	0.87	15.71	8.39	1.03	18.64	9.67	1.19	21.49	10.95	1.34	24.20
		6	2.21	0.32	5.78	3.50	0.50	9.03	4.78	0.69	12.46	6.06	0.87	15.71	7.34	1.05	18.96	8.62	1.23	22.26	9.90	1.42	25.65	11.18	1.60	28.90
		5	2.45	0.42	7.59	3.73	0.64	11.56	5.01	0.86	15.53	6.29	1.08	19.50	7.57	1.30	23.48	8.85	1.52	27.51	10.13	1.74	31.42	11.41	1.96	35.40
MKT2H-800(E)	1361	10	2.03	0.17	2.50	4.19	0.36	5.29	6.30	0.54	7.94	8.38	0.72	10.58	10.45	0.90	13.23	12.52	1.08	15.88	14.59	1.25	18.38	16.66	1.43	21.02
		8	2.84	0.31	4.56	4.96	0.53	7.79	7.04	0.76	11.17	9.11	0.98	14.41	11.18	1.20	17.64	13.24	1.42	20.87	15.31	1.64	24.11	17.37	1.87	27.49
		7	3.23	0.40	5.88	5.33	0.65	9.56	7.40	0.91	13.38	9.47	1.16	17.05	11.54	1.42	20.87	13.60	1.67	24.55	15.67	1.92	28.22	17.74	2.18	32.05
		6	3.61	0.52	7.64	5.69	0.82	12.05	7.76	1.11	16.32	9.83	1.41	20.73	11.89	1.70	24.99	13.96	2.00	29.40	16.03	2.30	33.81	18.10	2.59	38.07
		5	3.98	0.68	10.00	6.06	1.04	15.29	8.12	1.40	20.58	10.19	1.75	25.73	12.25	2.11	31.02	14.32	2.46	36.16	16.39	2.82	41.45	18.46	3.17	46.60
MKT2H-1000(E)	1702	10	2.76	0.24	4.68	5.42	0.47	9.17	7.98	0.69	13.46	10.50	0.90	17.55	13.01	1.12	21.84	15.51	1.33	25.94	18.01	1.55	30.23	20.51	1.76	34.32
		8	3.71	0.40	7.80	6.28	0.67	13.07	8.81	0.95	18.53	11.31	1.22	23.79	13.81	1.48	28.86	16.31	1.75	34.13	18.80	2.02	39.39	21.30	2.29	44.66
		7	4.16	0.51	9.95	6.70	0.82	15.99	9.21	1.13	22.04	11.71	1.44	28.08	14.21	1.74	33.93	16.70	2.05	39.98	19.20	2.36	46.02	21.69	2.66	51.87
		6	4.59	0.66	12.87	7.11	1.02	19.89	9.61	1.38	26.91	12.11	1.73	33.74	14.60	2.09	40.76	17.09	2.45	47.78	19.59	2.80	54.60	22.09	3.16	61.62
		5	5.00	0.86	16.77	7.51	1.29	25.16	10.00	1.72	33.54	12.50	2.15	41.93	14.99	2.58	50.31	17.49	3.01	58.70	19.99	3.43	66.89	22.48	3.86	75.27
MKT2H-1200(E)	2042	10	2.11	0.18	3.42	4.78	0.41	7.79	7.43	0.64	12.16	10.08	0.87	16.53	12.72	1.09	20.71	15.36	1.32	25.08	18.01	1.55	29.45	20.65	1.77	33.63
		8	3.19	0.34	6.46	5.84	0.63	11.97	8.48	0.91	17.29	11.12	1.19	22.61	13.77	1.48	28.12	16.42	1.76	33.44	19.07	2.05	38.95	21.72	2.33	44.27
		7	3.72	0.46	8.74	6.37	0.78	14.82	9.01	1.11	21.09	11.65	1.43	27.17	14.30	1.76	33.44	16.95	2.08	39.52	19.60	2.41	45.79	22.26	2.73	51.87
		6	4.25	0.61	11.59	6.89	0.99	18.81	9.53	1.37	26.03	12.18	1.74	33.06	14.83	2.12	40.28	17.49	2.50	47.50	20.14	2.88	54.72	22.81	3.27	62.13
		5	4.77	0.82	15.58	7.42	1.27	24.13	10.06	1.73	32.87	12.71	2.18	41.42	15.37	2.64	50.16	18.03	3.10	58.90	20.69	3.56	67.64	23.36	4.01	76.19
MKT2H-1400(E)	2383	10	0.42	0.04	0.81	0.92	0.08	1.62	1.40	0.12	2.44	1.88	0.16	3.25	2.35	0.20	4.06	2.82	0.24	4.87	3.29	0.28	5.68	3.76	0.32	6.50
		8	0.62	0.07	1.42	1.10	0.12	2.44	1.58	0.17	3.45	2.05	0.22	4.47	2.52	0.27	5.48	2.99	0.32	6.50	3.46	0.37	7.51	3.93	0.42	8.53
		7	0.71	0.09	1.83	1.19	0.15	3.05	1.66	0.20	4.06	2.13	0.26	5.28	2.60	0.32	6.50	3.07	0.38	7.71	3.54	0.43	8.73	4.01	0.49	9.95
		6	0.80	0.11	2.23	1.28	0.18	3.65	1.75	0.25	5.08	2.22	0.32	6.50	2.69	0.38	7.71	3.16	0.45	9.14	3.63	0.52	10.56	4.09	0.59	11.98
		5	0.89	0.15	3.05	1.36	0.23	4.67	1.83	0.31	6.29	2.30	0.40	8.12	2.77	0.48	9.74	3.24	0.56	11.37	3.71	0.64	12.99	4.18	0.72	14.62

Heating capacity modification coefficient table:

Model	MKT2H-200(E)	MKT2H-300(E)	MKT2H-400(E)	MKT2H-500(E)	MKT2H-600(E)	MKT2H-800(E)	MKT2H-1000(E)	MKT2H-1200(E)	MKT2H-1400(E)
Mid-speed	0.88	0.87	0.86	0.88	0.86	0.88	0.89	0.9	0.9
Low-speed	0.74	0.75	0.75	0.76	0.74	0.75	0.75	0.76	0.75

9. Explored View

MKT2-200 MKT2H-200

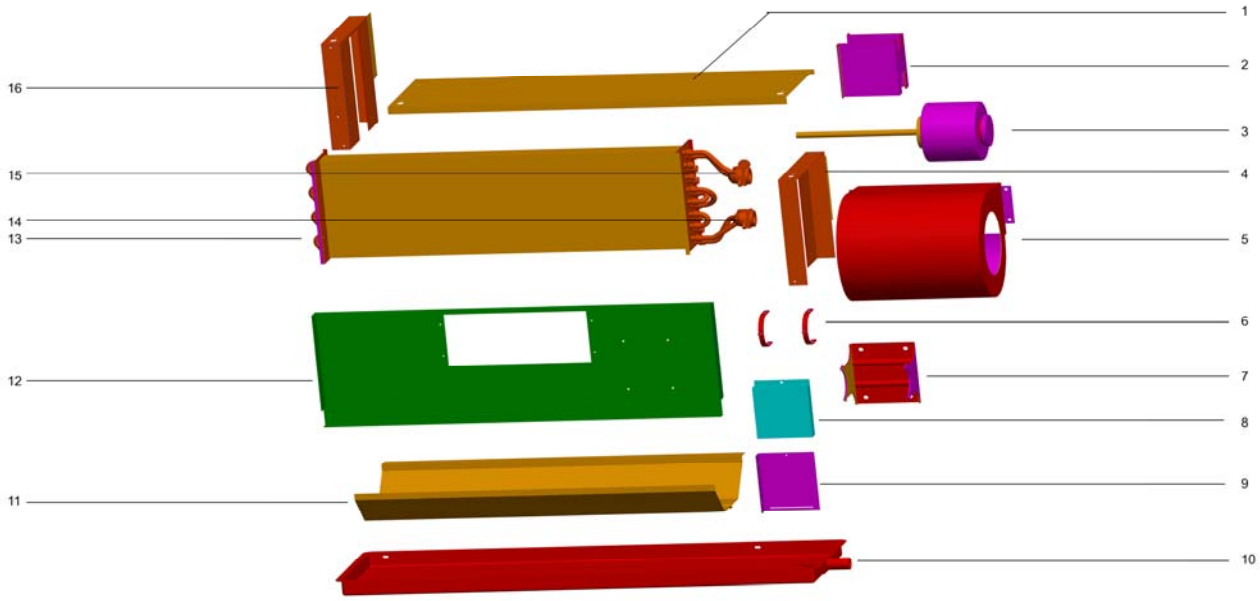

No.	Part Name	Quantity		No.	Part Name	Quantity
1	Top cover assembly	1		9	The electrical engineering connects the line box	1
2	Valve Fixing Board	1		10	Drip tray assembly	1
3	Asynchronism motor	1		11	Guiding board for water draining	1
4	Left clap board	1		12	Middle Beam Partition Board subassembly	1
5	Breeze machine module	1		13	Evaporator assembly	1
6	The electrical engineering stalk set presses the cover	1		14	Water inlet valve for water collector	1
7	Motor mounting bracket	1		15	Water outlet valve for water collector	1
8	The electrical engineering connects a cover of line	1		16	Right clapboard	1

MKT2-300 MKT2H-300 MKT2-400 MKT2H-400
MKT2-500 MKT2H-500 MKT2-600 MKT2H-600

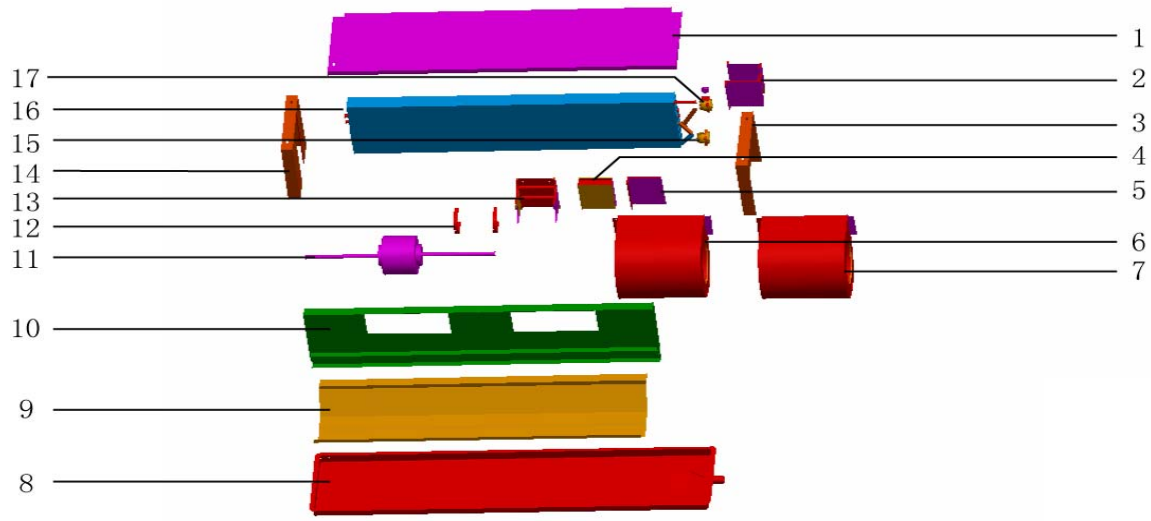

No.	Part Name	Quantity		No.	Part Name	Quantity
1	Top cover assembly	1		10	Middle Beam Partition Board subassembly	1
2	Valve Fixing Board	1		11	Asynchronism motor	1
3	Left clap board	1		12	The electrical engineering stalk set presses the cover	4
4	The electrical engineering connects a cover of line	1		13	Motor mounting bracket	1
5	The electrical engineering connects the line box	1		14	Right clapboard	1
6	Breeze machine module	1		15	Water inlet valve for water collector	1
7	Breeze machine module	1		16	Evaporator assembly	1
8	Drip tray assembly	1		17	Water outlet valve for water collector	1
9	Guiding board for water draining	1				

MKT2-800 MKT2H-800 MKT2-1000 MKT2H-1000
MKT2-1200 MKT2H-1200 MKT2-1400 MKT2H-1400

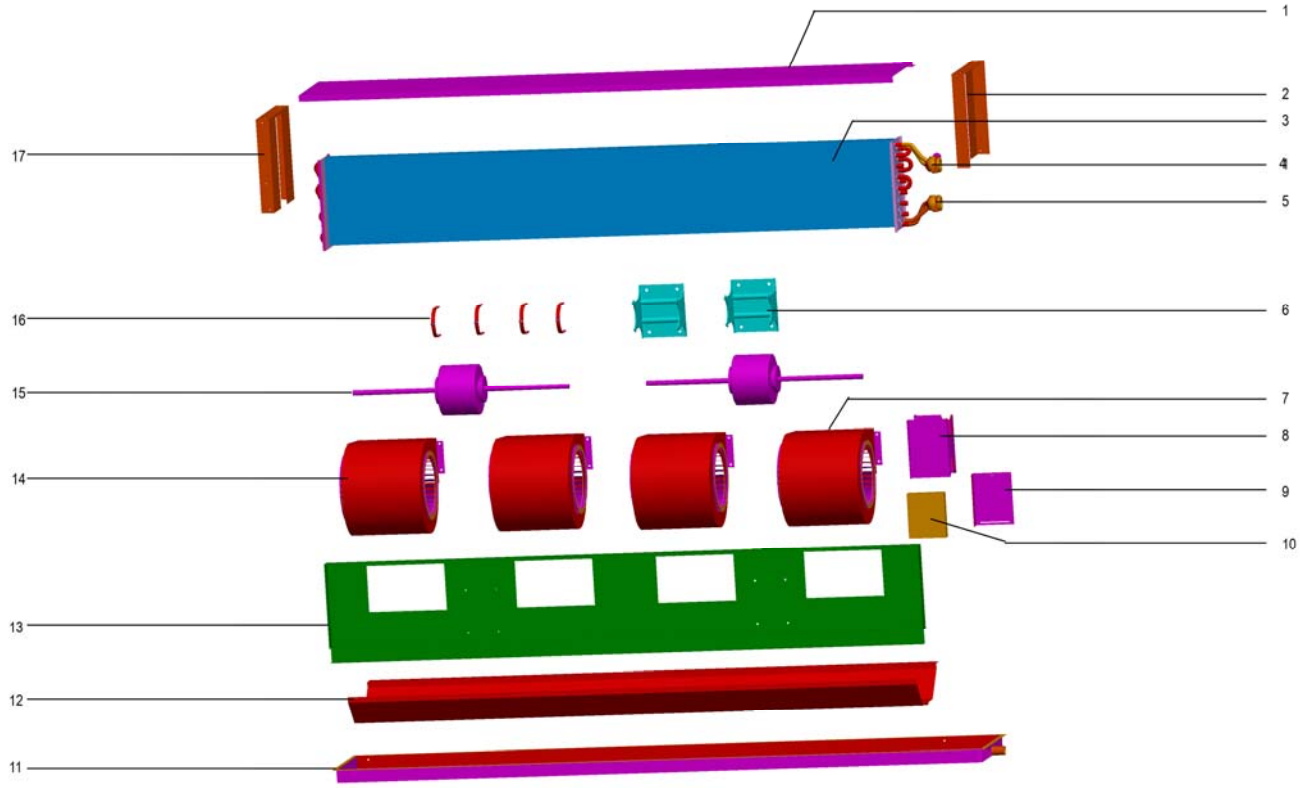

No.	Part Name	Quantity		No.	Part Name	Quantity
1	Top cover assembly	1		10	The electrical engineering connects a cover of line	1
2	Left clap board	1		11	Drip tray assembly	1
3	Evaporator assembly	1		12	Guiding board for water draining	1
4	Water outlet valve for water collector	1		13	Middle Beam Partition Board subassembly	1
5	Water inlet valve for water collector	1		14	Breeze machine module	2
6	Motor mounting bracket	2		15	Asynchronism motor	2
7	Breeze machine module	2		16	The electrical engineering stalk set presses the cover	8
8	Valve Fixing Board	1		17	Right clapboard	1
9	The electrical engineering connects the line box	1			The electrical engineering connects a cover of line	1

MKT2-200E MKT2H-200E

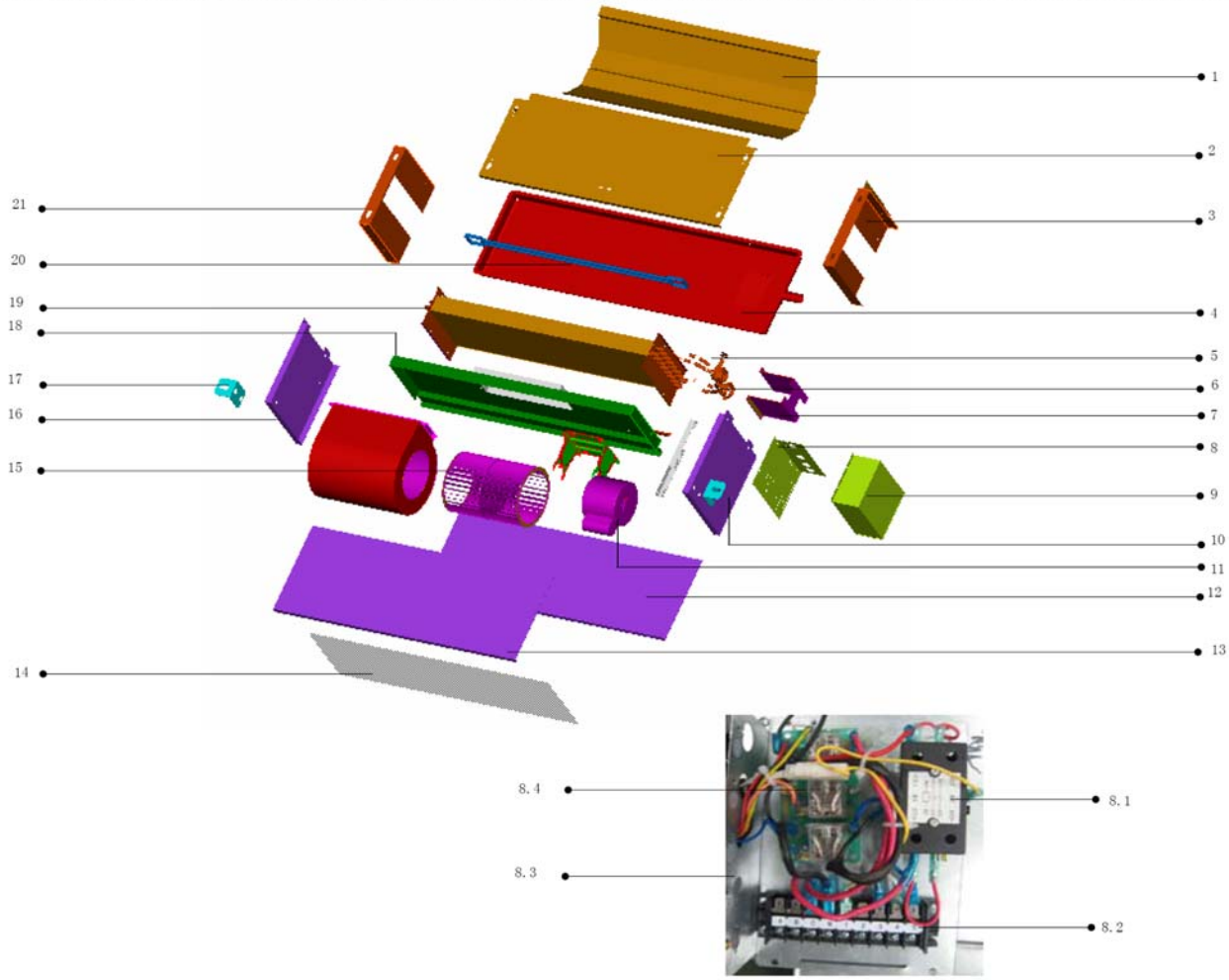

No.	Part Name	Quantity		No.	Part Name	Quantity
1	Drainage pan	1		10	Right cover plate ass'y	1
2	Top cover ass'y	1		11	Motor ass'y	1
3	Left clapboard ass'y	1		12	Rear below cover plate ass'y	1
4	Drainage pan ass'y	1		13	Up cover plate ass'y	1
5	Water outlet valve	1		14	Air filter	1
6	Water outlet valve	1		15	Fan ass'y	1
7	Installing board	1		16	Left cover plate ass'y	1
8	E-part box ass'y	1		17	Hook	2
8.1	Contactor	1		18	Middle beam partition board ass'y	1
8.2	Wire joint, 9p	1		19	Evaporator ass'y	1
8.3	E-part box Installation board	1		20	Electric heater ass'y	1
8.4	Relay control board ass'y	1		21	Right clapboard	1
9	E-Part box cover ass'y	1				

MKT2-300E MKT2H-300E MKT2-400E MKT2H-400E
MKT2-500E MKT2H-500E MKT2-600E MKT2H-600E

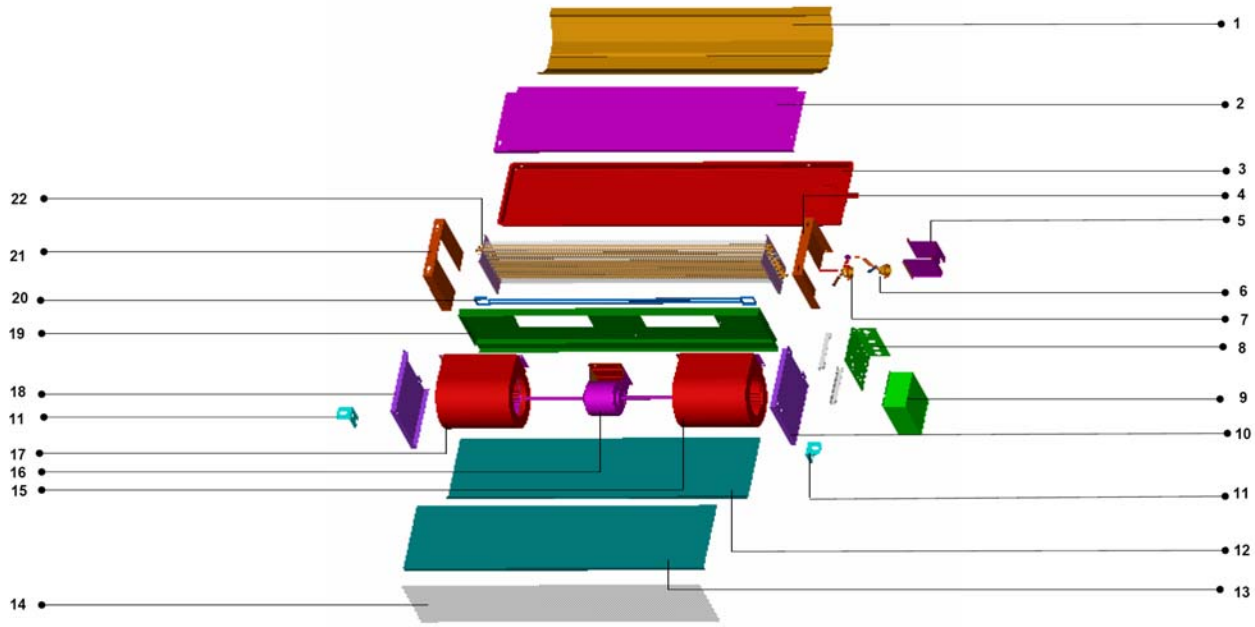

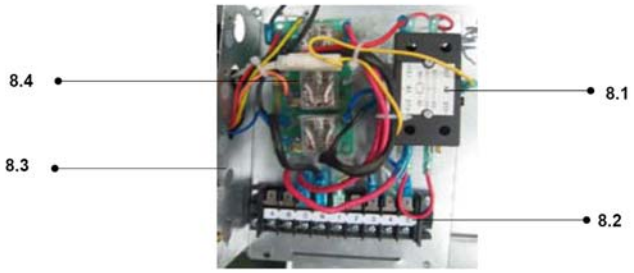

No.	Part Name	Quantity		No.	Part Name	Quantity
1	Drainage pan	1		10	Right cover plate ass'y	1
2	Top cover ass'y	1		11	Hook	2
3	Drainage pan ass'y	1		12	Rear below cover plate ass'y	1
4	Left clapboard ass'y	1		13	Up cover plate ass'y	1
5	Installing board	1		14	Air filter	1
6	Water outlet valve	1		15	Fan ass'y	1
7	Water outlet valve	1		16	Motor ass'y	1
8	E-part box ass'y	1		17	Fan ass'y	1
8.1	Contactor	1		18	Left cover plate ass'y	1
8.2	Wire joint, 9p	1		19	Middle beam partition board ass'y	1
8.3	E-part box Installation board	1		20	Electric heater ass'y	1
8.4	Relay control board ass'y	1		21	Right clapboard	1
9	E-Part box cover ass'y	1		22	Evaporator ass'y	1

MKT2-800E MKT2H-800E MKT2-1000E MKT2H-1000E
MKT2-1200E MKT2H-1200E MKT2-1400E MKT2H-1400E

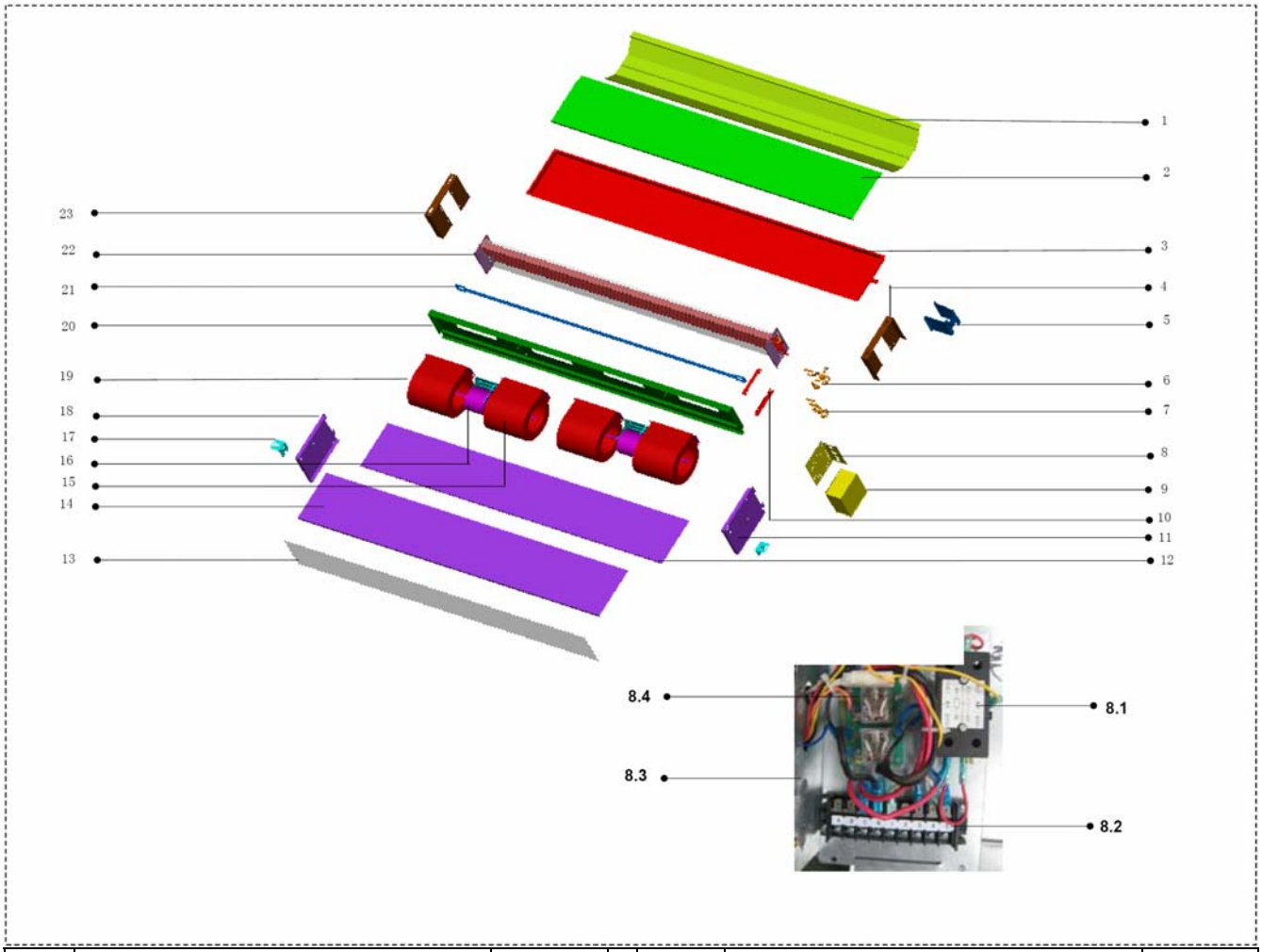

No.	Part Name	Quantity		No.	Part Name	Quantity
1	Drainage pan	1		11	Right cover plate ass'y	1
2	Top cover ass'y	1		12	Rear below cover plate ass'y	1
3	Drainage pan ass'y	1		13	Filter	1
4	Left clapboard ass'y	1		14	Up cover plate ass'y	1
5	Installing board	1		15	Fan ass'y	2
6	Water inlet valve	1		16	Motor ass'y	2
7	Water outlet valve	1		17	Hook	2
8	E-part box ass'y	1		18	Left cover plate ass'y	1
8.1	Contactor	1		19	Fan ass'y	2
8.2	Wire joint, 9p	1		20	Middle beam partition board ass'y	1
8.3	E-part box Installation board	1		21	Electric heater ass'y	1
8.4	Relay control board ass'y	1		22	Evaporator ass'y	1
9	E-Part box cover ass'y	1		23	Right clapboard	1
10	Installation bracket	2				

10. Installation

10.1 Installation place

There is enough room for installation and maintenance.

The ceiling is horizontal, and its structure can endure the weight of the indoor unit.

The air outlet and the air inlet are not impeded, and the influence of external air is the least.

The air flow can reach throughout the room.

The connecting pipe and drainpipe could be extracted out easily.

There is no direct radiation from heaters

Caution

Location in the following places may cause malfunction of the machine. (If unavoidable, please consult your local dealer.)

a. There exists petrolatum.

b. There is salty air surrounding (near the coast).

c. There is caustic gas (the sulfide, for example) existing in the air (near a hot spring).

d. The Volt vibrates violently (in the factories).

10.2 Install the Main Body

Please refer to the following figure for the hanging screw bolts.

Please install with Ø10 hanging screw bolts.

The handling to the ceiling varies from the constructions,

Consult the construction person for the specific condition.

1. The size of the ceiling to be handled------ Do keep the ceiling flat. Consolidate the roof beam for possible vibration.
2. Cut off the roof beam.
3. Strengthen the place that has been cut off, and consolidate the roof beam.

Carry out the pipe and line operation in the ceiling after finishing the installation of the main body. While choosing where to start the operation, determine the direction of the pipes to be drawn out. Especially in case there is a ceiling, position the refrigerant pipes, drain pipes, indoor lines to the connection places before hanging up the machine.

The installation of hanging screw bolts.

Wooden structure

Put rectangular sticks across the beams, and set pendant bolts. (See Fi gure 1)

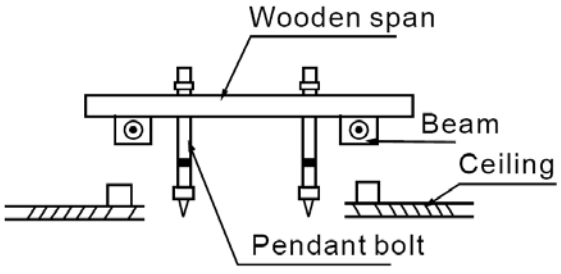

Figure 1

New concrete roughcast

Set it with embedded bushes or embedded bolts. (Figure 2)

(Blade plug-in unit) (Slide plug-in unit)

Figure 2

Old concrete roughcast

Use embedded bolts, embedded pulling plugs, and embedded stick harness.(Figure 3)

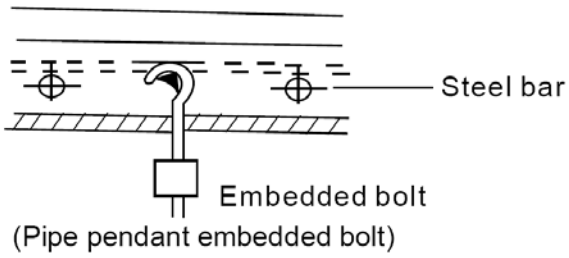

(Pipe pendant embedded bolt)

Steel beam and girder structure

Set and use supportive angle steel.(Figure 4)

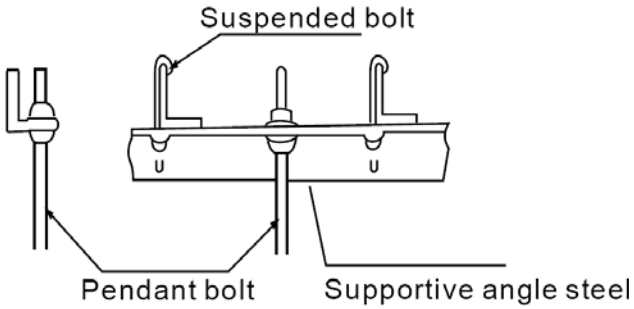

Suspending the indoor unit

(1) Use tools such as pulleys to hoist the indoor unit to the pendant bolt.

(2) Use tools such as gradient to settle the indoor unit horizontally. Lack of horizontality may cause water leak.

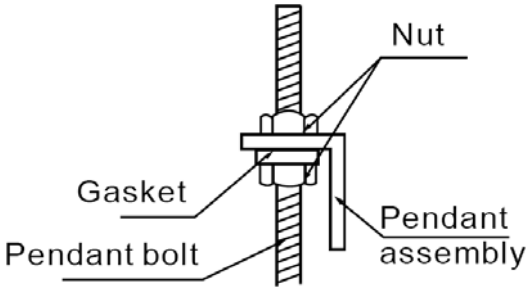

Figure 5

Pipe Connecting

(1) The water vent is with the air outlet valve; the other side is air inlet.

(2) When connecting the water collecting box, the torque is 6180~7540N.cm (630~770kgf.cm).

(3) Put the connecting tubing at the proper position, wrench the nuts with hands, then fasten it with a wrench. (Refer to Chart6)

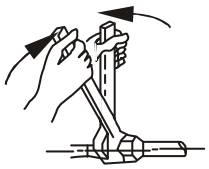

Chart 6

10.3 Connect the Drainage Pipe

1. Install indoor unit drain pipe

The outlet has PTI screw bread, please use sealing materials and pipe sheath (fitting) when connecting PVC pipes.

CAUTIONS:

The drain pipe of indoor unit must be heat insulated, or it will condense dew, as well as the connections of the indoor unit.

Hard PVC binder must be used for pipe connection, and make sure there is no leakage. With the connection part to the indoor unit, please be noted not to impose pressure on the side of indoor unit pipes.

When the declivity of the drain pipe downwards is over 1/100, there should not be any winding.

The total length of the drain pipe when pulled out traverse shall not exceed 20m, when the pipe is over long, a prop stand must be installed to prevent winding.

Refer to the figures on the right for the installation of the pipes.

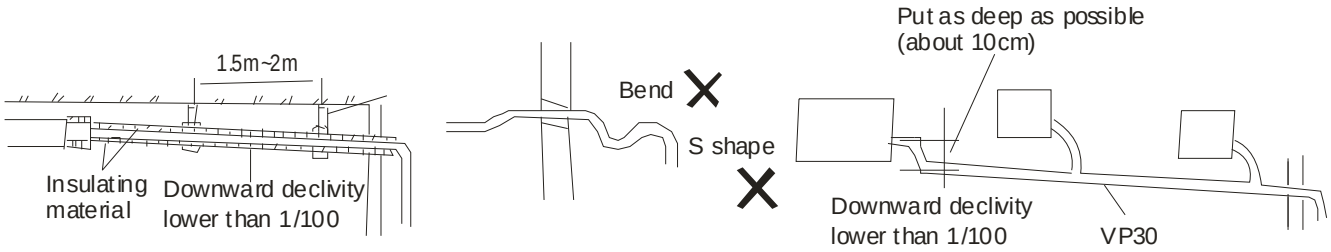

2. Drainage test

Check whether the drainpipe is unhindered

New built house should have this test done before paving the ceiling.

10.3 Wiring Installation

The connecting diagram refers to the wiring diagrams.

Fan coil unit model	Name of cable	Cable quantity	Specification	Note
All modes without auxiliary electrical heater	Fan power cord	1	RVV-300/500 5×1.0 mm^2	Connect the wire controller with fan coil units (Owner purchase it optionally)
	Control wire for magnetic valve	1	RVV-300/500 2×0.75 mm^2	Connect the wire controller with magnetic water valve (Owner purchase it optionally)
All modes with auxiliary electrical heater	Main power cord	1	RVV-300/500 3×3.3 mm^2	Owner purchase it optionally
	Controller power cord	1	RVV-300/500 3×2.5 mm^2	Owner purchase it optionally
	Control wire	1	RVV-300/500 5×1.5 mm^2	Owner purchase it optionally